BullSequana Edge

Installation Guide

86 A1 67FR 10 - May 2021

The following copyright notice protects this book under Copyright laws which prohibit such actions as, but not limited to, copying, distributing, modifying, and making derivative works.

Copyright ©Bull SAS 2021

Printed in France

Trademarks and Acknowledgements

We acknowledge the right of proprietors of trademarks mentioned in this manual.

All brand names and software and hardware product names are subject to trademark and/or patent protection.

Quoting of brand and product names is for information purposes only and does not represent trademark and/or patent misuse.

Hardware

May 2021

Bull Cedoc
357 avenue Patton
BP 20845
49008 Angers Cedex 01
FRANCE

The information in this document is subject to change without notice. Bull will not be liable for errors contained herein, or for incidental or consequential damages in connection with the use of this material.

Table of Contents

Preface **p-1**
Intended Readers p-1

Chapter 1. Checking the delivery contents **1-1**
1.1. Unpacking the server 1-1
1.2. Checking labels 1-3
1.2.1. Identification and safety labels 1-3
1.2.2. MAC address label 1-5
1.2.3. Fan hazard safety label 1-5
1.2.4. PSU electrical hazard safety labels 1-6

Chapter 2. Installing the server **2-1**
2.1. Installing the antennas 2-2
2.2. Installing the server in a rack cabinet 2-3
2.2.1. Installing the rails in the rack cabinet 2-3
2.2.2. Installing the brackets on the server 2-7
2.2.3. Installing the server 2-8
2.3. Installing the server on a flat surface 2-10
2.4. Installing the server on a DIN rail 2-11
2.5. Installing the server on a VESA holder 2-13

Appendix A. Screws and washers **A-1**

Preface

This guide explains how to install the server.

See The Bull support web site for the most up-to-date product information, documentation, firmware updates, software fixes and service offers: http://support.bull.com

Intended Readers

This guide is intended for use by qualified personnel in charge of installing the server.

D049 **DANGER**

D049:

The product must not be used in life support system or other applications where failure could threaten injury or life, and any such use voids the limited warranty associated to the product.

Chapter 1. Checking the delivery contents

Important **ATTENTION: Please read carefully the safety instructions before you perform the procedures described in this manual.**
Multilingual Safety Notices Guide

1.1. Unpacking the server

Important **Before unpacking the device inspect the device packaging for damage.**

W020 **WARNING**
W020:
The server drawer must not be unpacked before it has reached the room temperature (24 hours in the computer room).

According to the device configuration, the following items are included:

- BullSequana Edge server with its front bezel or aesthetic covers
- Antennas
- Rack mount kit and brackets
- DIN rail kit
- Adhesive bump
- Screws and washers

Server with a front bezel

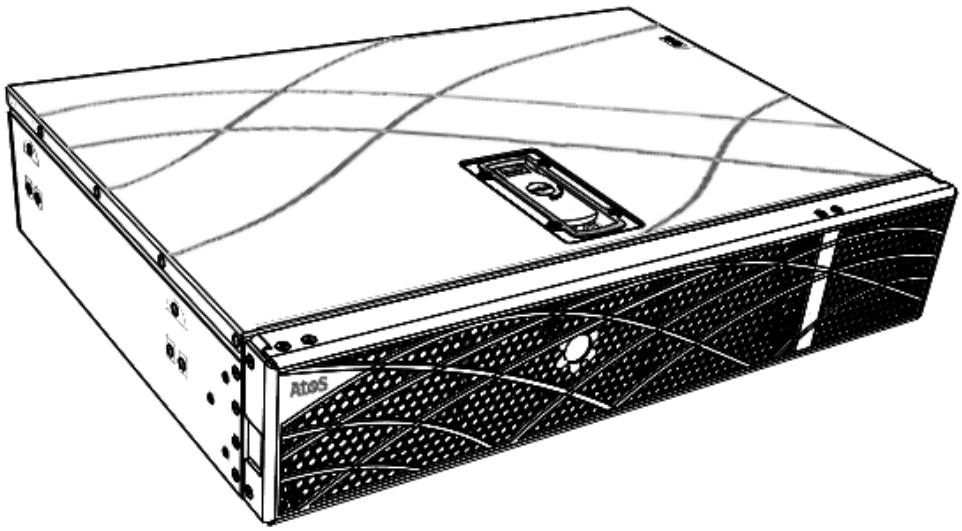

Server with aesthetic covers

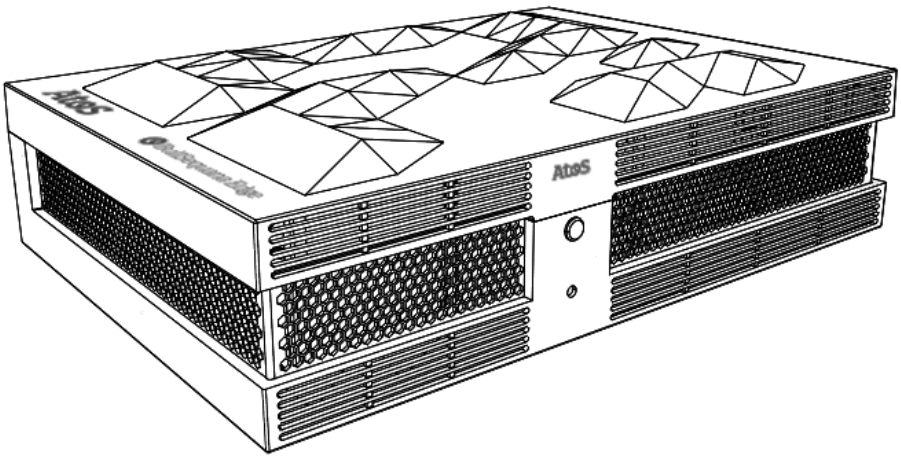

1.2. Checking labels

Safety warning label, including safety notices and graphic symbols, are present on the server. Check that the electrical installation in place complies with the label details.

1.2.1. Identification and safety labels

Identification label

The label is located at the back of the server.

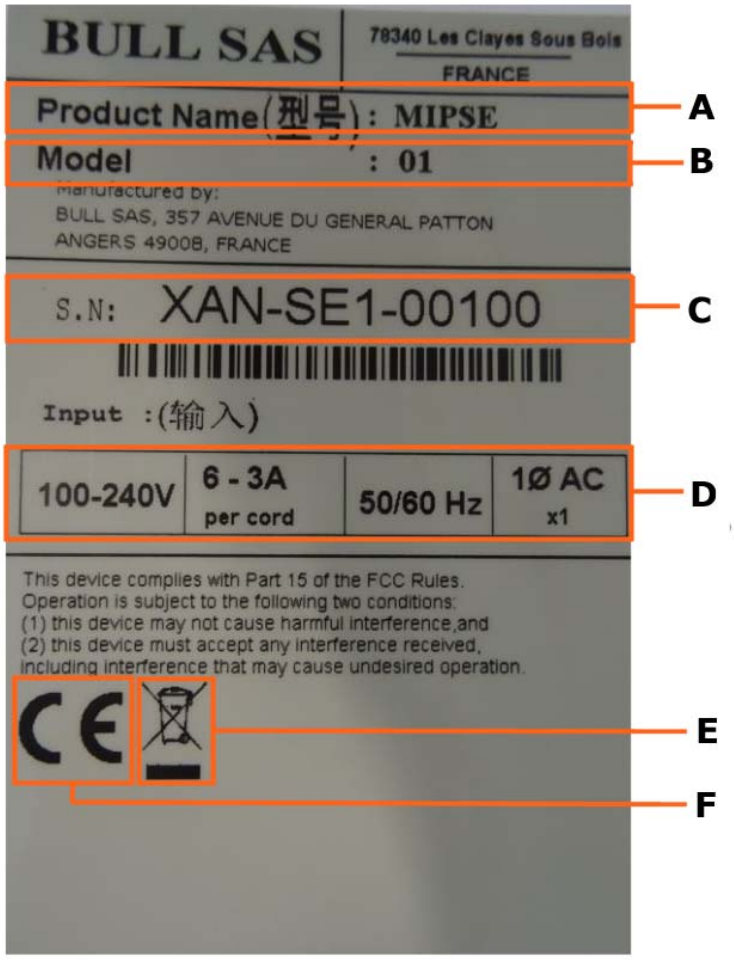

Mark	Description
A	Product name: MIPSE
B	Model number
C	Serial Number
D	Electrical characteristics
E	Recycling Symbol: Indicates the mandatory obligation to reuse and recycle electronic and electrical equipment properly.
F	Certification information

W071 **WARNING**

W071:
This device complies with Part 15 of the FCC Rules.
Operation is subject to the following two conditions:
(1) this device may not cause harmful interference and
(2) this device must accept any interference received including interference that may cause undesired operation

Marketing labels

For marketing purpose only, the product name is BullSequana Edge (G).

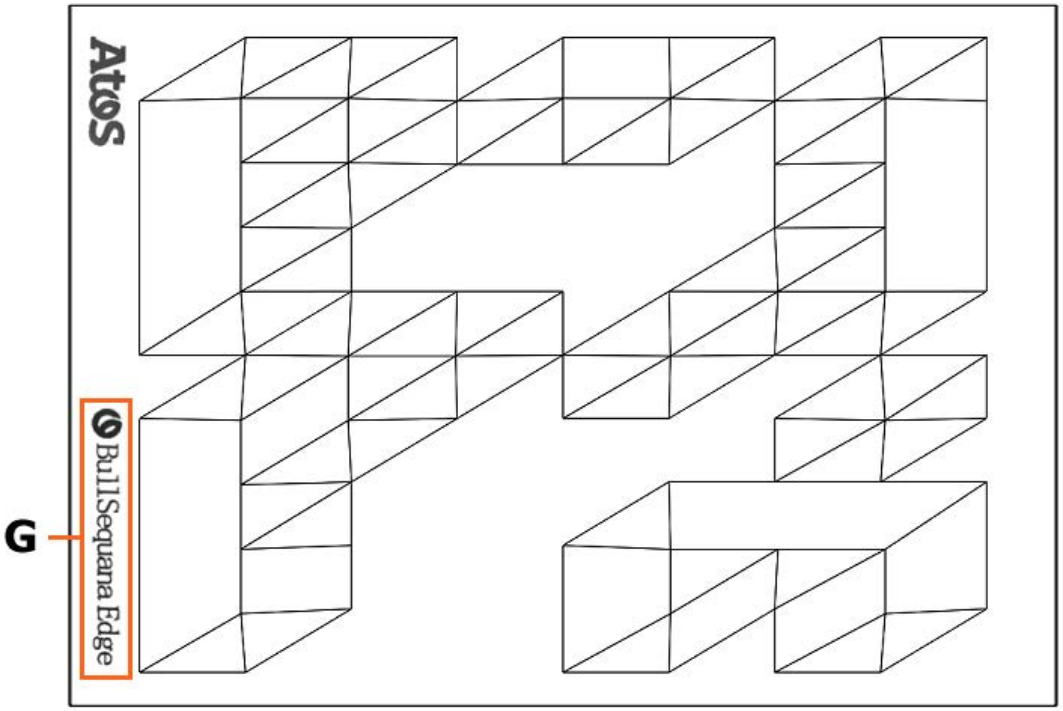

Electrical hazard label

The label is located at the back of the server and indicates risk of electric shock.

C051 **CAUTION**

C051:
This unit has one internal power supply. Disconnect power supply cable from the unit before servicing.

1.2.2. MAC address label

Important **It is recommended to write down the MAC address in case the label is lost.**

Localization

The label is on the right-hand of the server.

If needed, remove the top aesthetic cover to check the label.

MAC address label

1.2.3. Fan hazard safety label

Localization

The labels are on the fans, inside the server.

Fan hazard safety label

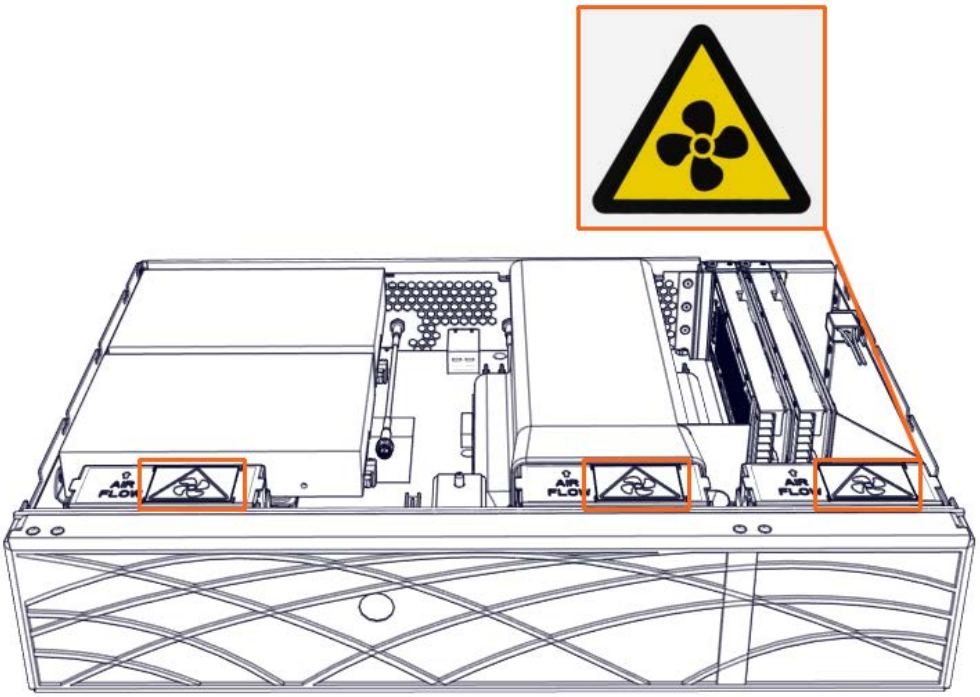

1.2.4. PSU electrical hazard safety labels

Localization

The labels are inside the server: on the disk tray, underneath the disks.

Electrical hazard safety label

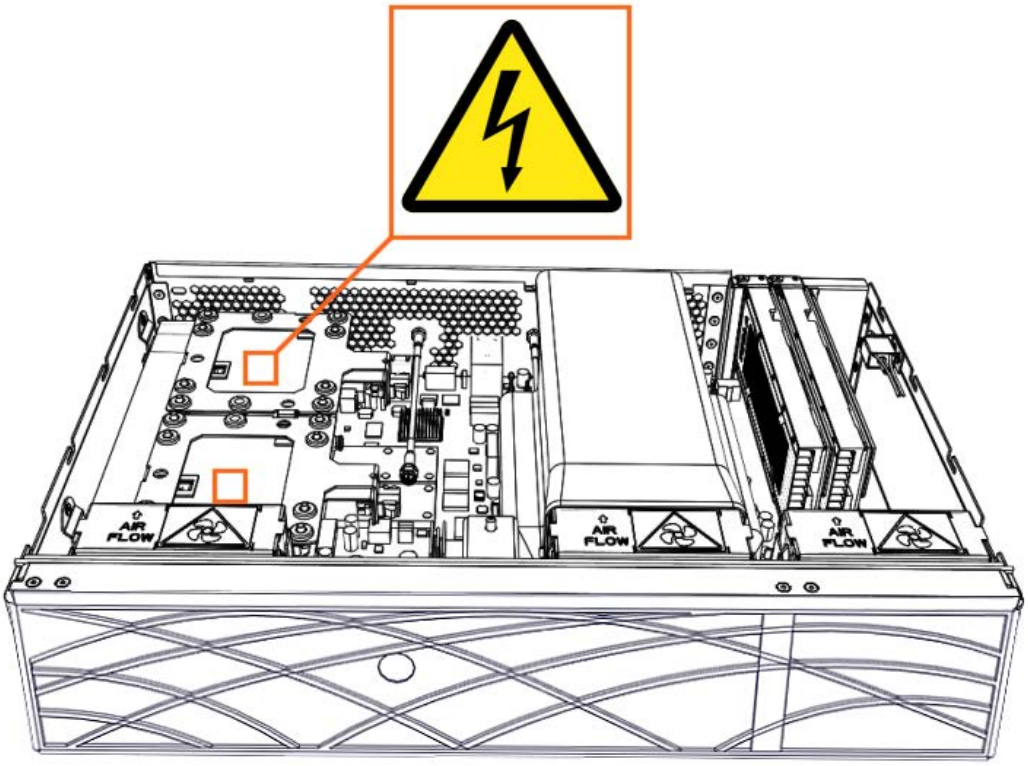

Chapter 2. Installing the server

C050 **CAUTION**

C050:
The device must be installed in a location where the transmitting antenna is at least 20 cm from any people in order to comply with radio frequency exposure regulatory requirements.

W079 **WARNING**

W079:
Devices and antennas must not be operated with other antennas or transmitters. Only devices and antennas, tested and approved by the manufacturer, should be used. It is prohibited to change the configuration of devices or antennas. Any changes will violate safety rules.

W080 **WARNING**

W080:
Use only antennas which have been provided and approved by the manufacturer. Non-approved antennas may produce excessive radio frequency transmitting power and may exceed FCC/IC limits. Non-approved antenna use is prohibited.

2.1. Installing the antennas

Note The pictures in the following procedure show a server with a front bezel but the same procedure applies to a server with aesthetic covers.

1. Locate the antenna position

Rear view

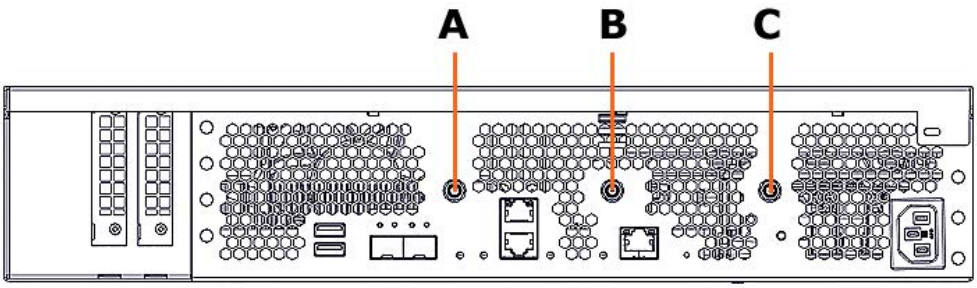

Mark	Description
A	External antenna 2 : (Dual-band WiFi or LoRaWAN or LTE 3G/4G GSM
B	External antenna 1 : Dual-band WiFi or LoRaWAN or LTE 3G/4G GSM
C	External antenna 0 : BMC WiFi

2. Turn the antenna to fix it to the server

Rear view

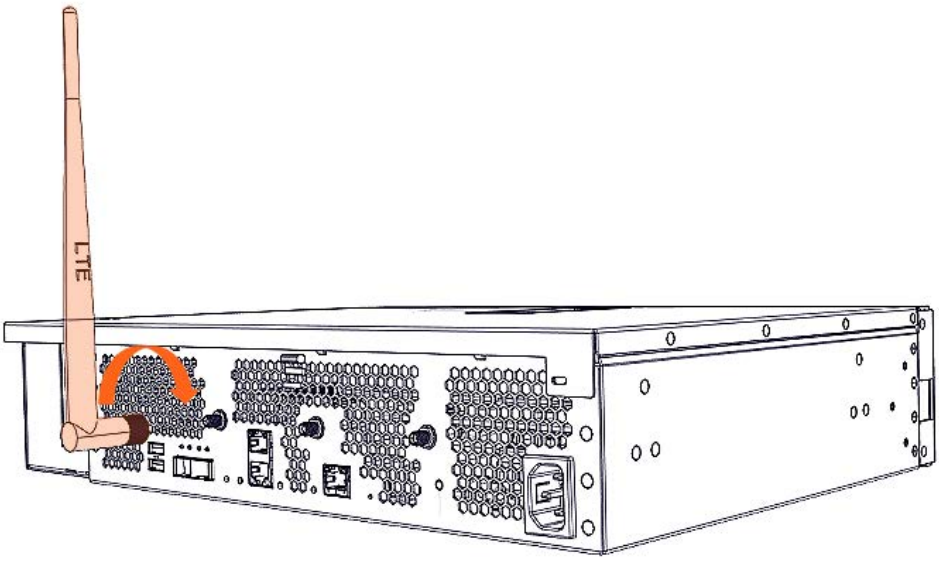

2.2. Installing the server in a rack cabinet

Note A server with aesthetic covers cannot be installed in a rack cabinet.

Required screws, nuts and washers

See Appendix A Screws and washers

Required tools

- T25 Torx screwdriver
- T20 Torx screwdriver
- T10 Torx screwdriver

2.2.1. Installing the rails in the rack cabinet

1. Prepare the rails

1. Loosen the screws of each rail.

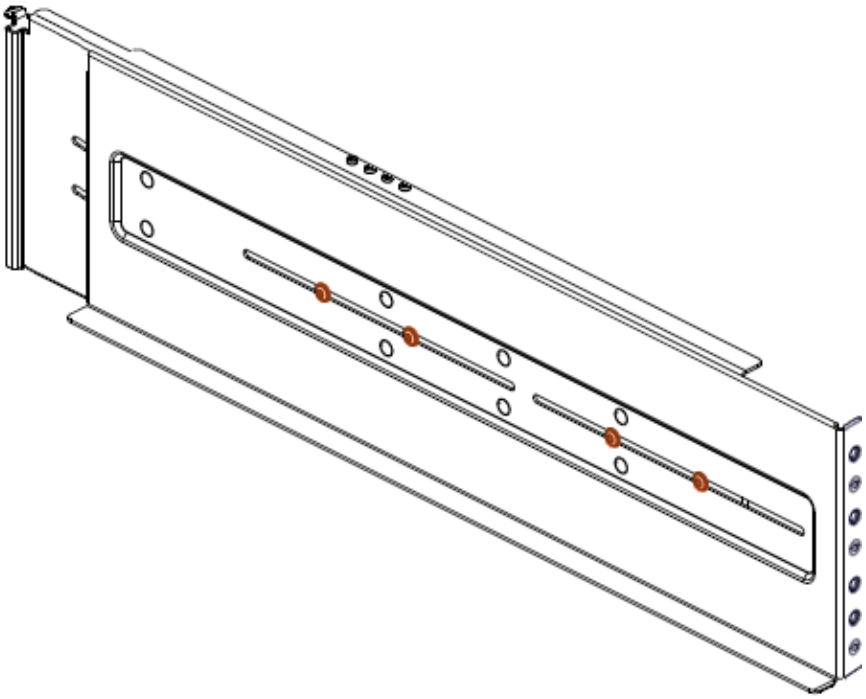

2. Adjust the length of each rail.

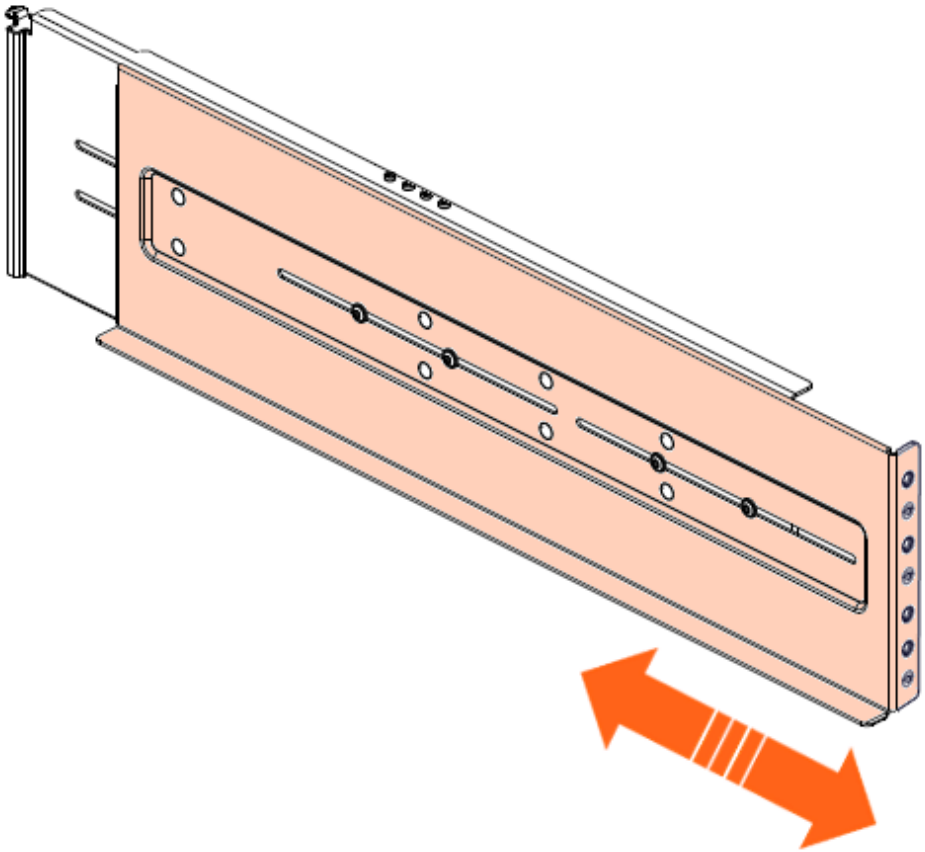

3. Tighten the screws of each rail.

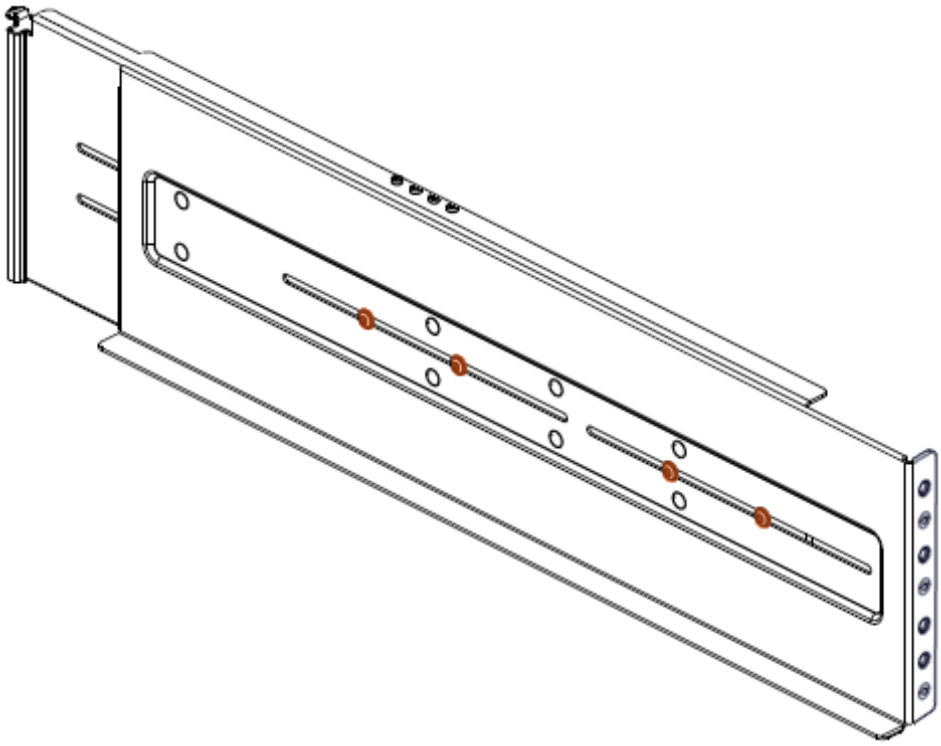

2. From the front, install the left rail

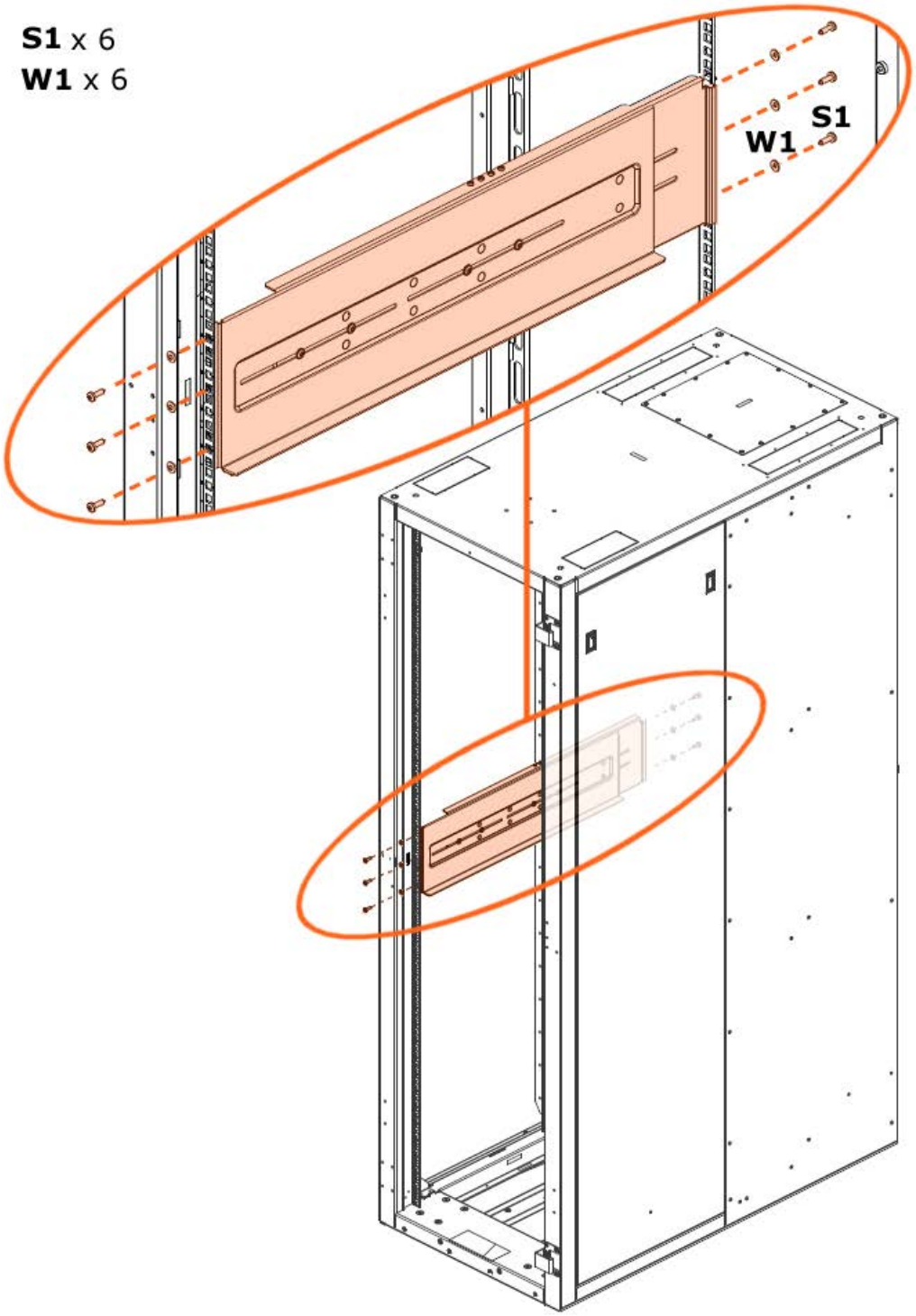

3. **From the front, install the right rail**

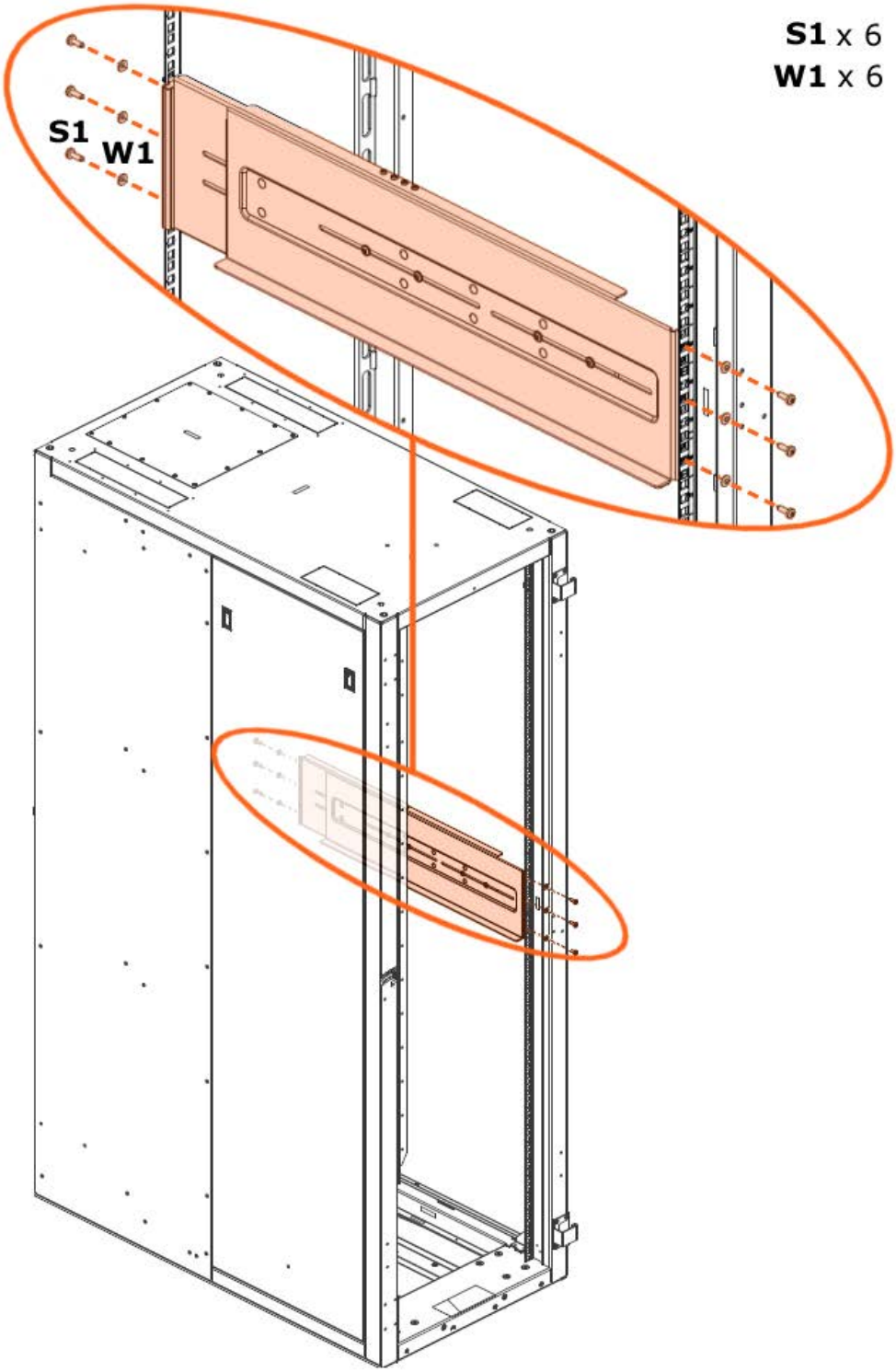

2.2.2. Installing the brackets on the server

1. **Position the brackets**

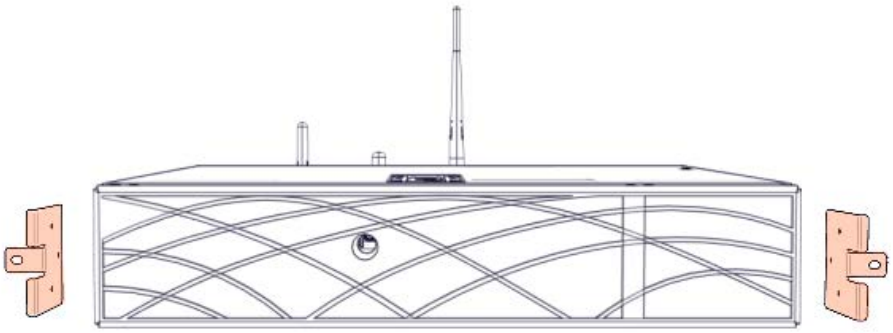

2. **Tighten the screws**

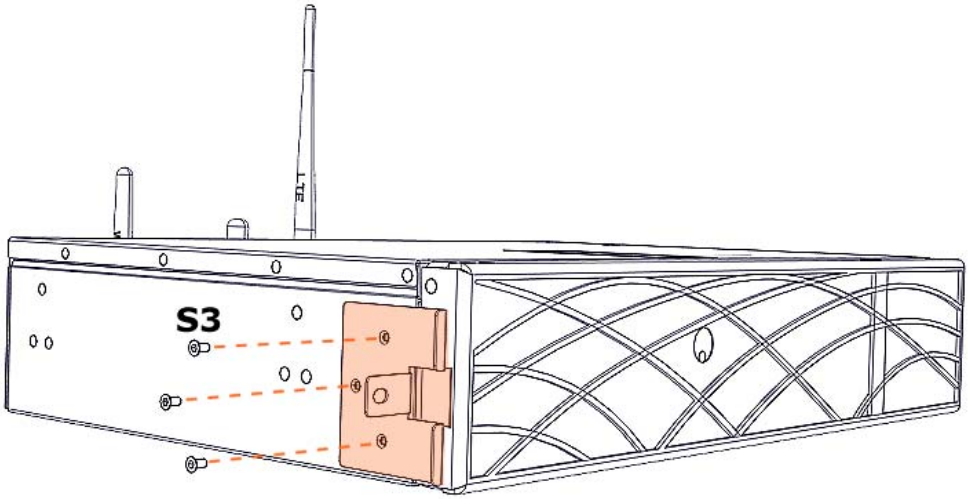

2.2.3. Installing the server

1. **Insert the server into the rack cabinet**

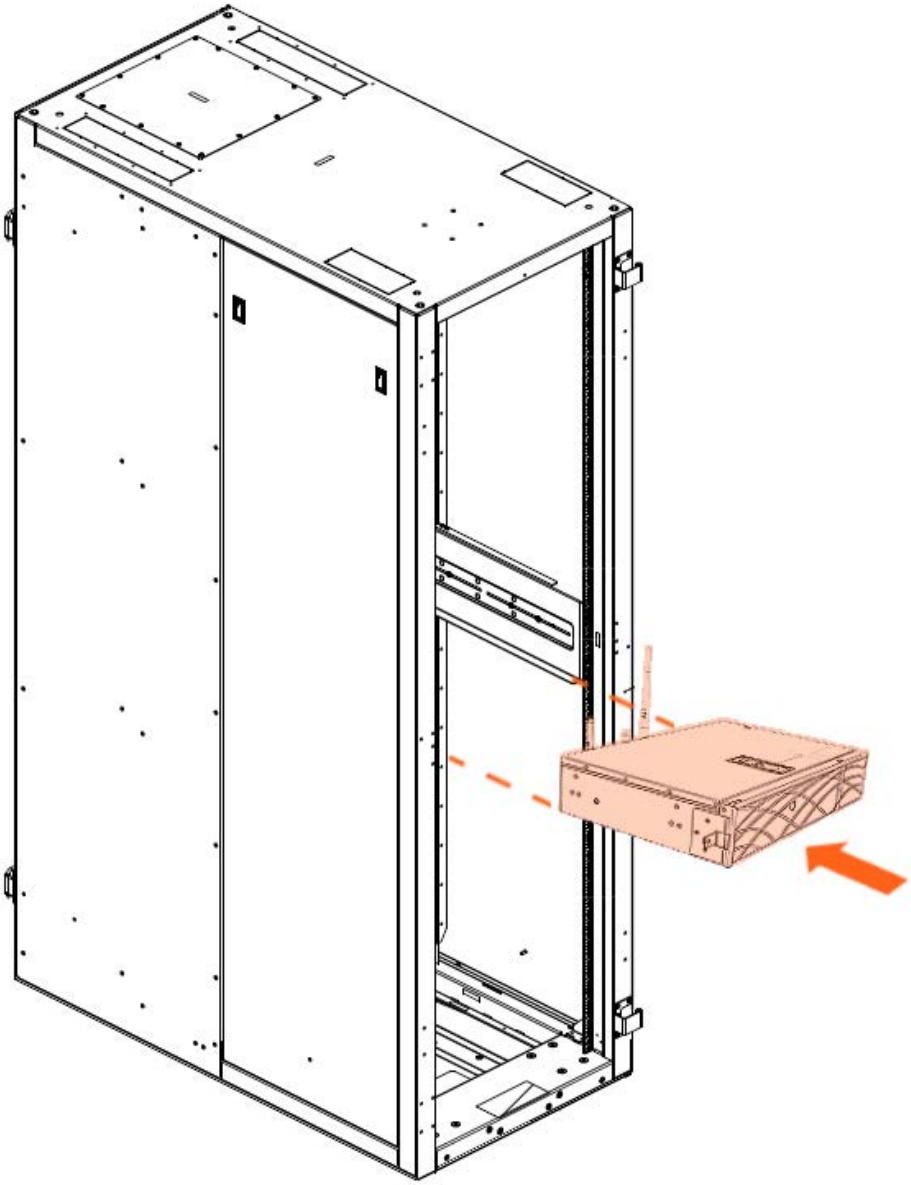

2. Secure the server in place

1. Push the server until it stops
2. Tighten the screws and washers

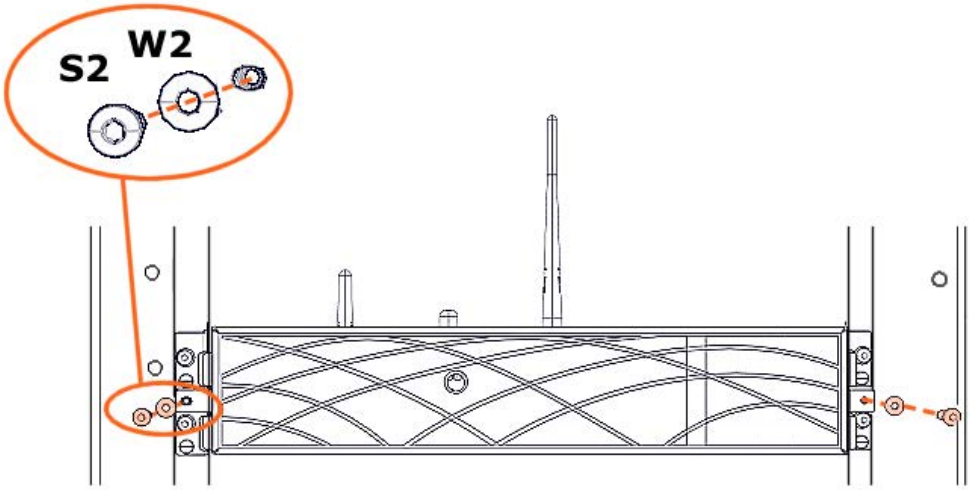

2.3. Installing the server on a flat surface

Note The pictures in the following procedure show a server with a front bezel but the same procedure applies to a server with aesthetic covers.

Stick on the adhesive bumps under the server and install it on the flat surface.

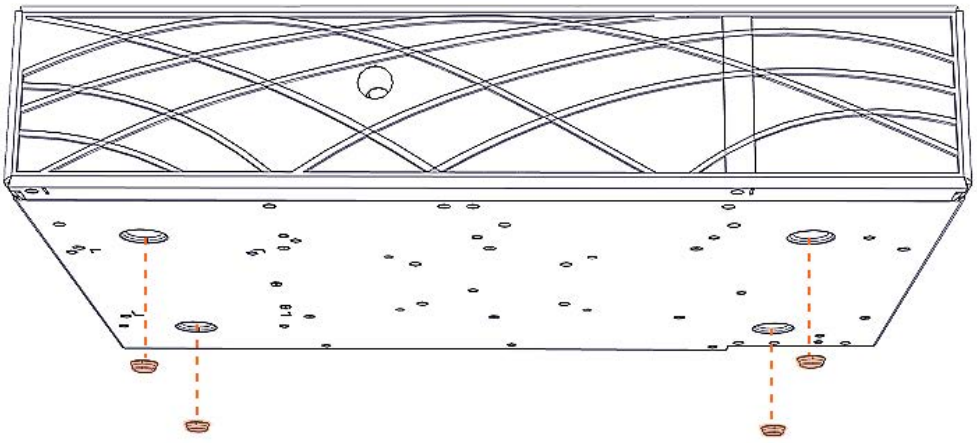

2.4. Installing the server on a DIN rail

Required screws, nuts and washers

See Appendix A Screws and washers

Required tools

- Phillips screwdriver
- T20 Torx screwdriver

Procedure

1. **Assemble the DIN rail kit and the server.**

Server with a front bezel

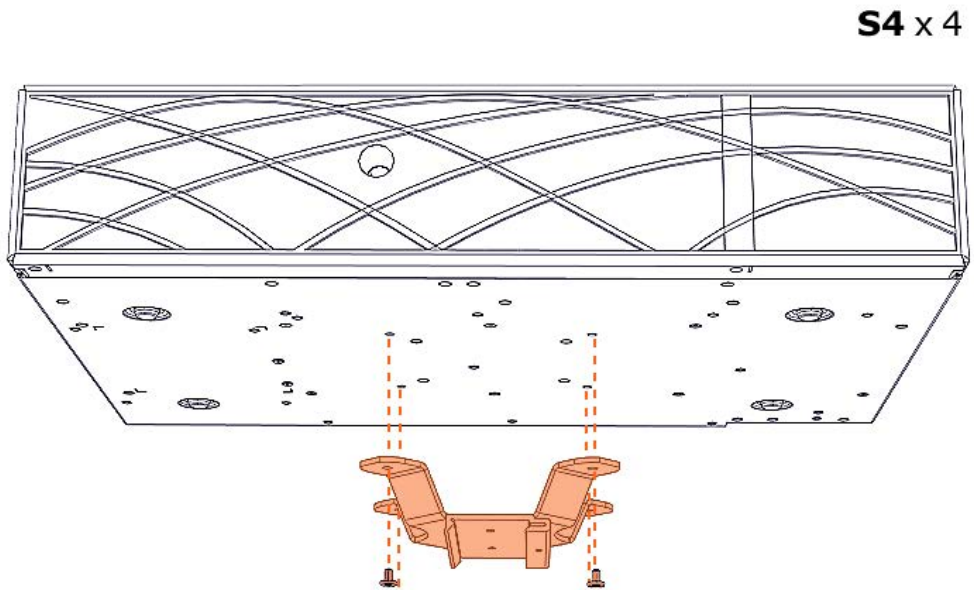

Server with aesthetic covers

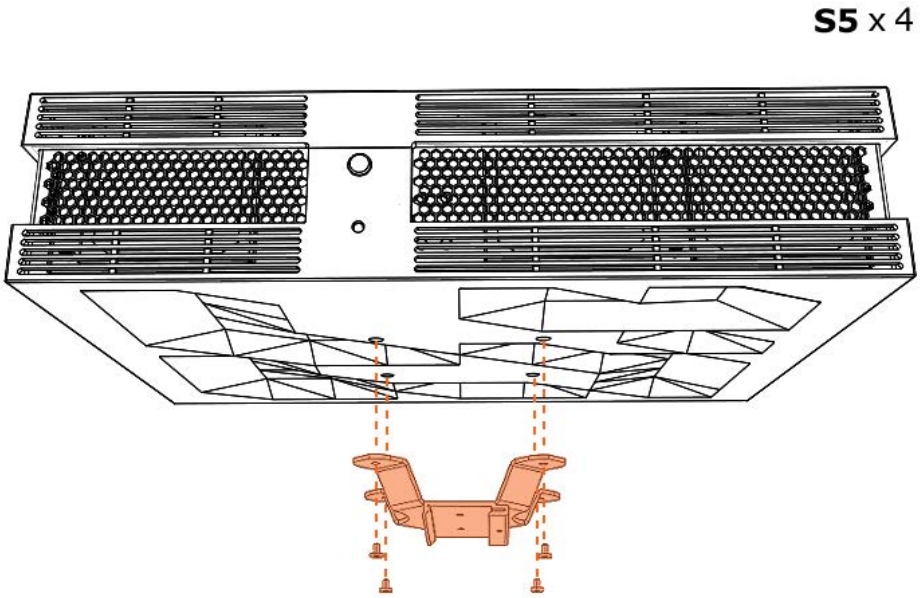

2. **Turn the BullSequana Edge to the upright position.**

3. **Attach the BullSequana Edge to the DIN rail by carefully tilting it.**

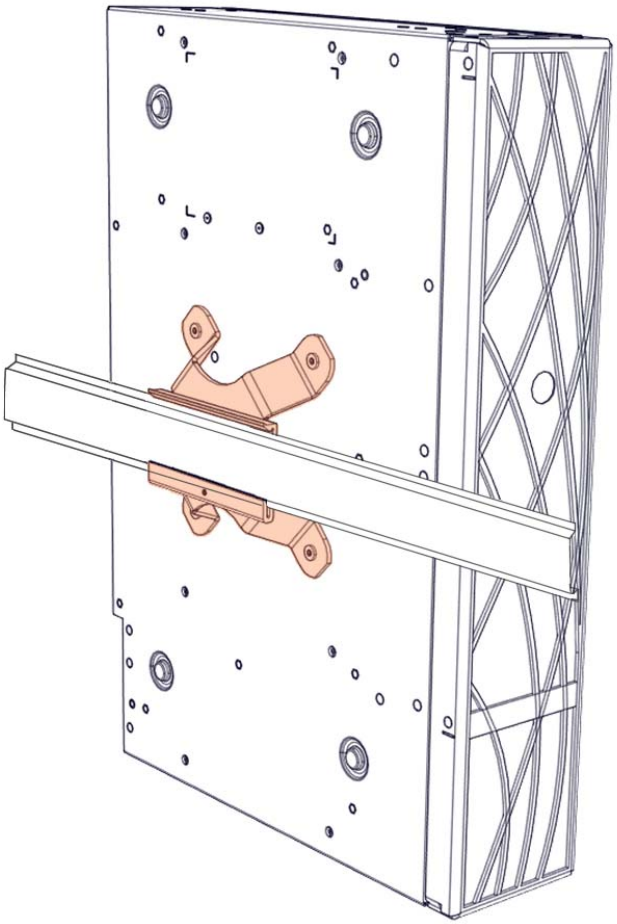

2.5. Installing the server on a VESA holder

W088 **WARNING**

W088:
To secure the server safely to the wall the correct type of screw anchor must be used. The screw anchors should be designed for the wall construction material (wood, concrete, etc.) and capable of bearing a weight of up to 30 kg.

Note The pictures in the following procedure show a server with a front bezel but the same procedure applies to a server with aesthetic covers.

Required screws, nuts and washers

See Appendix A Screws and washers

Required tools

- Phillips screwdriver
- Hex screwdriver
- Drill
- Hammer

Procedure

1. **Separate he monitor plate from the wall plate**
   1. Remove the screw (C).
   2. Slide the monitor plate (A) upwards to remove it from the wall plate (B).

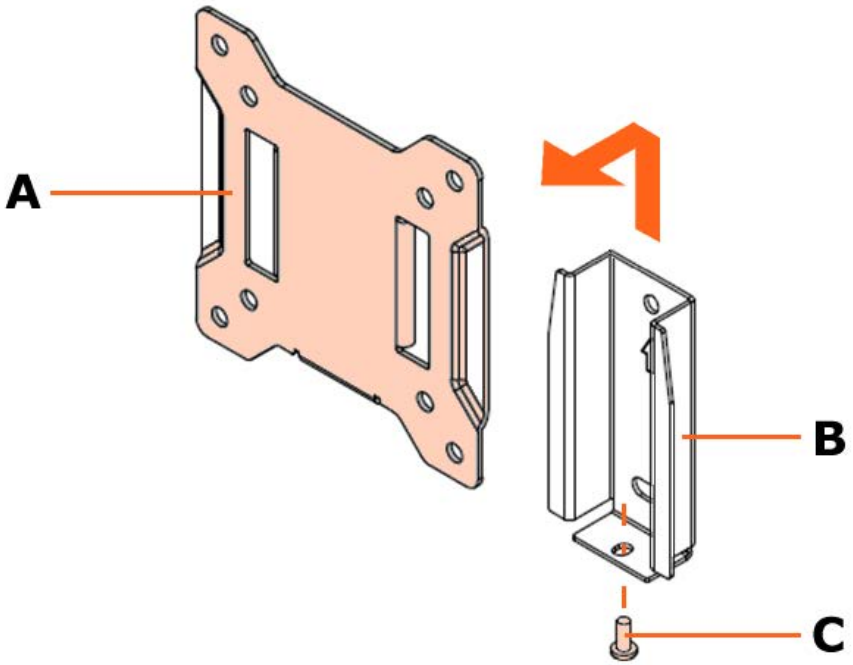

2. Install the wall plate on a wall

Case of solid wall

1. Drill two holes in the wall.
2. Fix the wall plate using screw anchors and lag bolts.

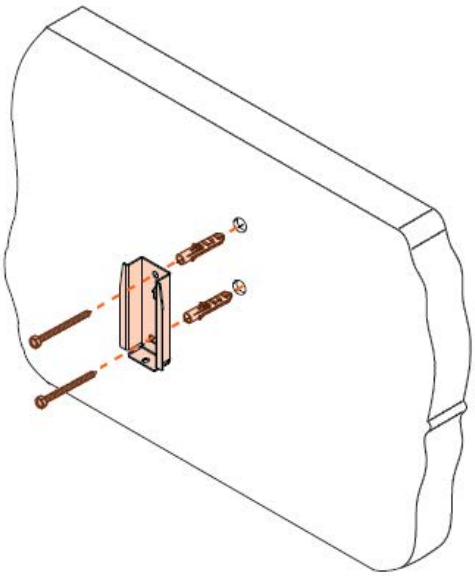

Case of wooden wall

1. Drill two holes in the wall.
2. Fix the wall plate using two lag bolts.

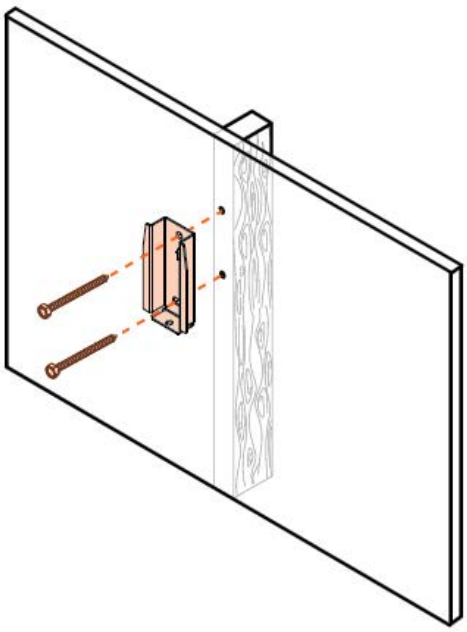

3. Install the monitor plate on the server

Server with a front bezel

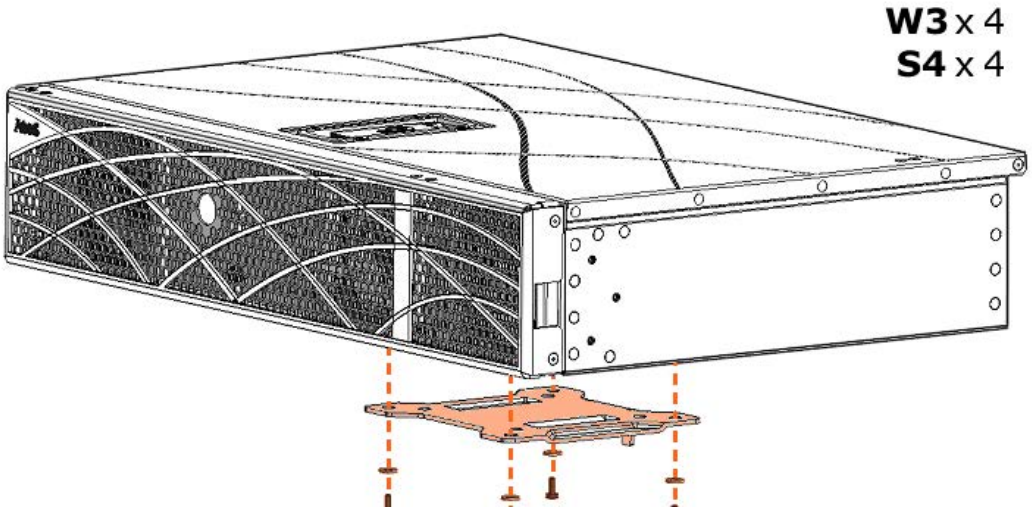

Server with aesthetic covers

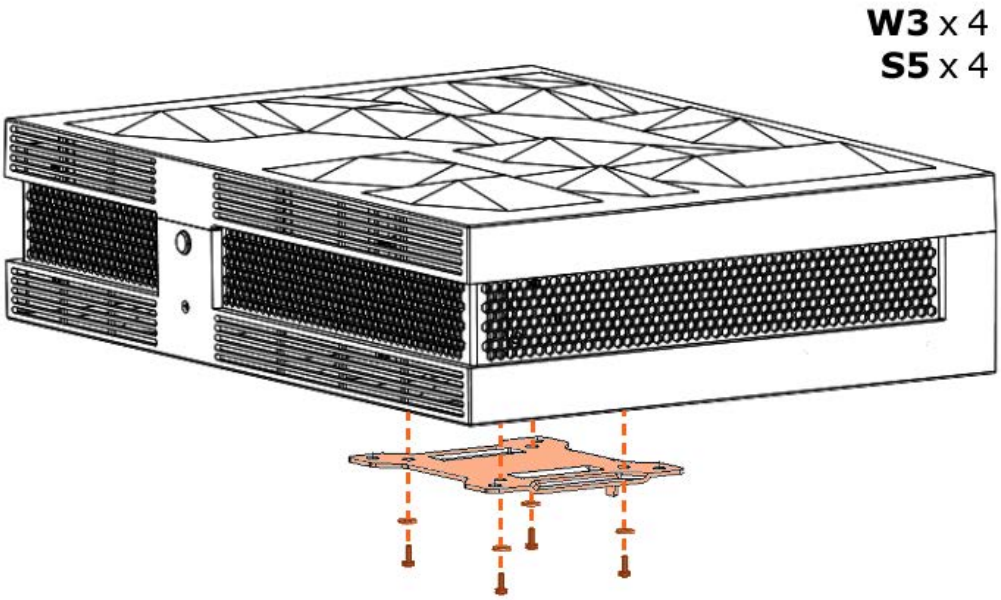

4. Install the server on the wall

1. Slide the monitor plate downwards into the wall plate (B).
2. Tighten the screw (C) to secure the server in place.

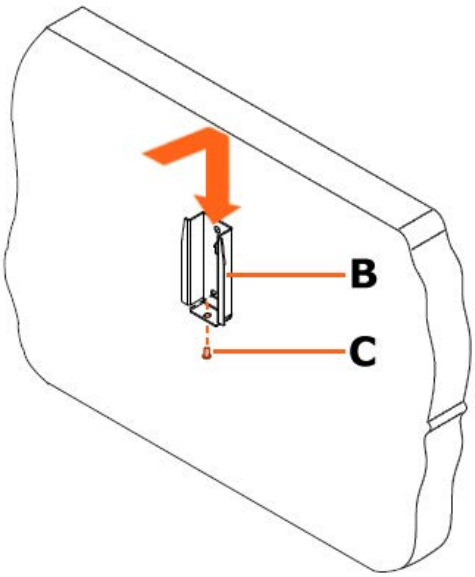

Appendix A. Screws and washers

This appendix describes all screws and washers included in the delivery.

Screws

Mark	Head	Body	Diameter	Length	Description
S1			5 mm	8 mm	CBLX head screw M5x8
S2			5 mm	16 mm	CBLX head screw M5x16
S3			3 mm	6 mm	FX head screw M3x6
S4			4 mm	6 mm	CX low head screw M4x6
S5		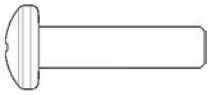	4 mm	20 mm	CBLZ head screw M4x20 Black
S6		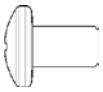	4 mm	8 mm	CBLZ head screw M4x8 Black

Washers

Mark	Head	Body	Diameter	Description
W1	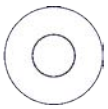		5 mm	M5 Ø12 washer thickness 1mm
W2			5 mm	Middle contact washer M5
W3			4 mm	M4 conical spring lock washer

Bull Cedoc
357 avenue Patton
BP 20845
49008 Angers Cedex 01
FRANCE