BullSequana Edge

Customer Service Guide

86 A1 93FR 06 - May 2021

The following copyright notice protects this book under Copyright laws which prohibit such actions as, but not limited to, copying, distributing, modifying, and making derivative works.

Copyright ©Bull SAS 2021

Printed in France

Trademarks and Acknowledgements

We acknowledge the right of proprietors of trademarks mentioned in this manual.

All brand names and software and hardware product names are subject to trademark and/or patent protection.

Quoting of brand and product names is for information purposes only and does not represent trademark and/or patent misuse.

Hardware

May 2021

Bull Cedoc
357 avenue Patton
BP 20845
49008 Angers Cedex 01
FRANCE

The information in this document is subject to change without notice. Bull will not be liable for errors contained herein, or for incidental or consequential damages in connection with the use of this material.

Table of Contents

Preface **p-1**
Intended Readers p-1

Chapter 1. Servicing a network antenna **1-1**
1.1. Removing a network antenna 1-2
1.2. Installing a network antenna 1-3

Chapter 2. Servicing a fan **2-1**
2.1. Removing a fan 2-2
2.2. Installing a fan 2-7

Chapter 3. Servicing the processor air duct **3-1**
3.1. Removing the processor air duct 3-2
3.2. Installing the processor air duct 3-6

Chapter 4. Servicing a memory module **4-1**
4.1. Removing a memory module 4-2
4.2. Installing a memory module 4-7

Chapter 5. Servicing an accelerator **5-1**
5.1. Removing an accelerator 5-2
5.2. Installing an accelerator 5-7

Chapter 6. Servicing a 2.5" disk **6-1**
6.1. Removing a 2.5" disk 6-2
6.2. Installing a 2.5" disk 6-7

Chapter 7. Servicing a 3.5” disk **7-1**
7.1. Removing a 3.5" disk 7-2
7.2. Installing a 3.5" disk 7-7

Chapter 8. Servicing an intrusion detection switch **8-1**
8.1. Removing an intrusion detection switch 8-2
8.2. Installing an intrusion detection switch 8-8

Chapter 9. Other maintenance tasks **9-1**
9.1. Resetting the Baseboard Management Controller (BMC) 9-1
9.1.1. Restarting the BMC 9-1
9.1.2. Resetting the BMC to default factory settings 9-3
9.2. Recovering firmware 9-5
9.2.1. Recovering BMC firmware 9-5
9.2.2. Recovering BIOS and CPLD firmware 9-8

Appendix A. Servicing the top aesthetic cover A-1
A.1. Removing the top aesthetic cover A-1
A.2. Installing the top aesthetic cover A-3

Appendix B. Servicing fan filters B-1
B.1. Fan filter description B-1
B.2. Removing a fan filter B-2
B.3. Installing a fan filter B-4

Preface

This guide explains how to replace the Customer Replaceable Units (CRU).

See The Bull support web site for the most up-to-date product information, documentation, firmware updates, software fixes and service offers: http://support.bull.com

Important **ATTENTION: Please read carefully the safety instructions before you perform the procedures described in this manual.**
Multilingual Safety Notices Guide

Intended Readers

This guide is intended for use by administrators and operators.

Chapter 1. Servicing a network antenna

Important **ATTENTION: Please read carefully the safety instructions before you perform the procedures described in this manual.**
Multilingual Safety Notices Guide

C004 **CAUTION**
C004:
Static electricity can damage the server and other electronic devices. To avoid damage, keep static-sensitive devices in their static-protective packages until you are ready to install them.
To reduce the possibility of damage from electrostatic discharge, observe the following precautions:
Limit your movement. Movement can cause static electricity to build up around you.
Wear an electrostatic-discharge wrist strap.
Handle the device carefully, holding it by its edges or its frame.
Do not touch solder joints, pins, or exposed circuitry.
Do not leave the device where others can handle and damage it.
While the device is still in its static-protective package, touch it to an unpainted metal surface on the outside of the server for at least 2 seconds. This drains static electricity from the package and from your body.
Remove the device from its package and install it directly into the server without setting down the device. If it is necessary to set down the device, put it back into its static-protective package. Do not place the device on the server cover or on a metal surface.
Take additional care when you handle devices during cold weather. Heating reduces indoor humidity and increases static electricity.

See BullSequana Edge Description Guide, 86 A1 65FR to locate the antenna.

1.1. Removing a network antenna

Required Tools

None

Procedure

1. **Unpack the new component on a clean ESD-protected work surface**

2. **Power off the server**

3. **Disconnect the power supply cable**

   Rear view

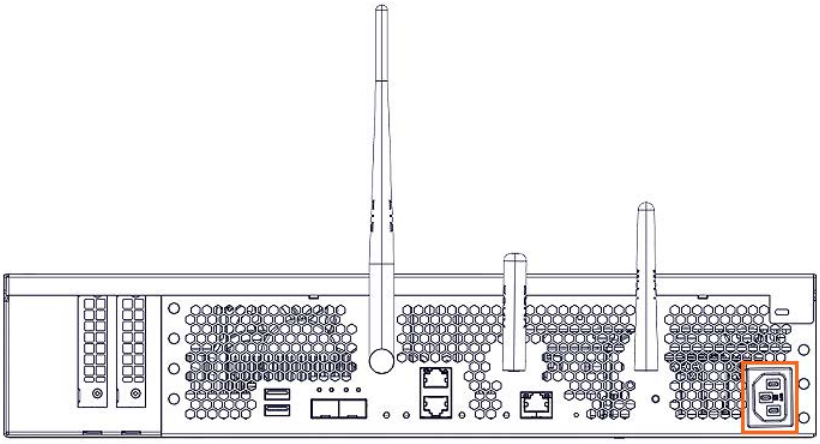

4. **Remove the aesthetic top cover if the aesthetic covers are present**

   See Appendix A Servicing the top aesthetic cover

5. **Remove the external antenna**

   Rear view

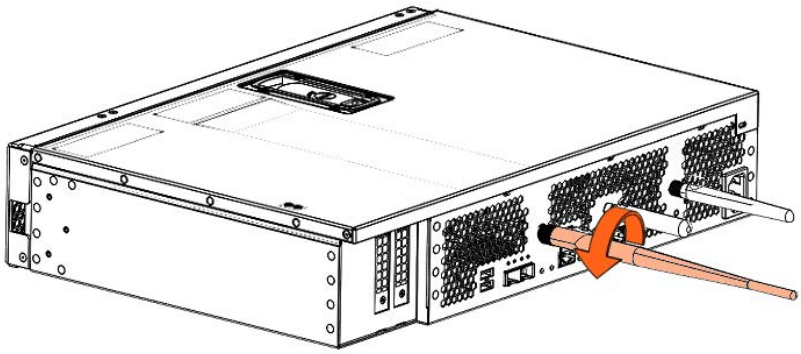

1.2. Installing a network antenna

Required Tools

None

Procedure

1. **Take hold of the new component**

2. **Install the external antenna**

   Rear view

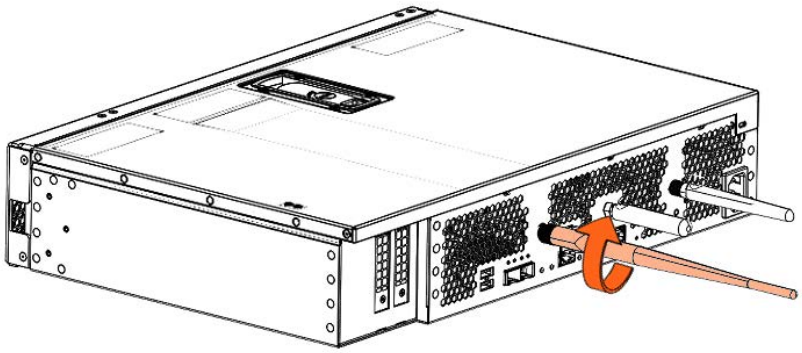

3. **Install the aesthetic top cover if the aesthetic covers are present**

   See Appendix A Servicing the top aesthetic cover

4. **Connect the power supply cable**

   Rear view

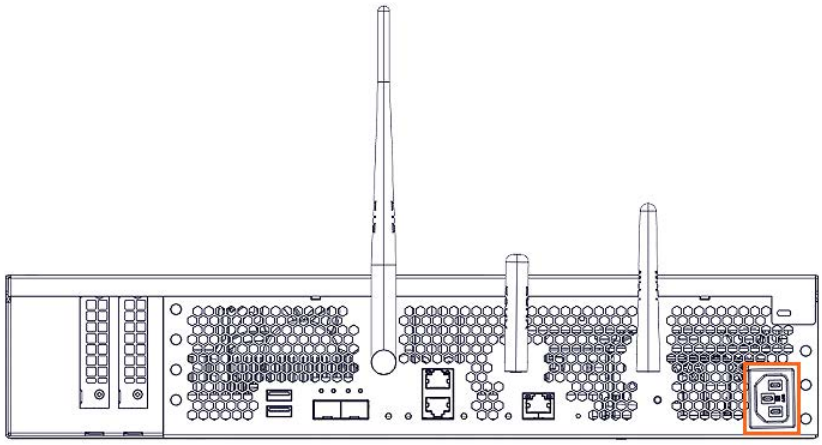

5. **Power on the server**

Chapter 2. Servicing a fan

Important **ATTENTION: Please read carefully the safety instructions before you perform the procedures described in this manual.**
Multilingual Safety Notices Guide

C004 **CAUTION**
C004:
Static electricity can damage the server and other electronic devices. To avoid damage, keep static-sensitive devices in their static-protective packages until you are ready to install them.
To reduce the possibility of damage from electrostatic discharge, observe the following precautions:
Limit your movement. Movement can cause static electricity to build up around you.
Wear an electrostatic-discharge wrist strap.
Handle the device carefully, holding it by its edges or its frame.
Do not touch solder joints, pins, or exposed circuitry.
Do not leave the device where others can handle and damage it.
While the device is still in its static-protective package, touch it to an unpainted metal surface on the outside of the server for at least 2 seconds. This drains static electricity from the package and from your body.
Remove the device from its package and install it directly into the server without setting down the device. If it is necessary to set down the device, put it back into its static-protective package. Do not place the device on the server cover or on a metal surface.
Take additional care when you handle devices during cold weather. Heating reduces indoor humidity and increases static electricity.

See BullSequana Edge Description Guide, 86 A1 65FR to locate the fan.

2.1. Removing a fan

Required Tools

None

Procedure

1. **Unpack the new component on a clean ESD-protected work surface**

2. **Power off the server**

3. **Disconnect the power supply cable**

   Rear view

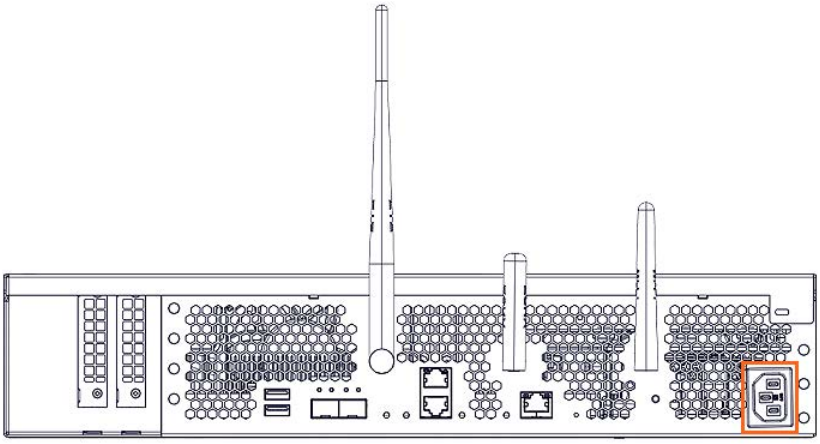

4. **Remove the top aesthetic cover if aesthetic covers are present**

See	Appendix A Servicing the top aesthetic cover

5. Remove the cover

1. Rotate the external antennas to the horizontal position.

Side view

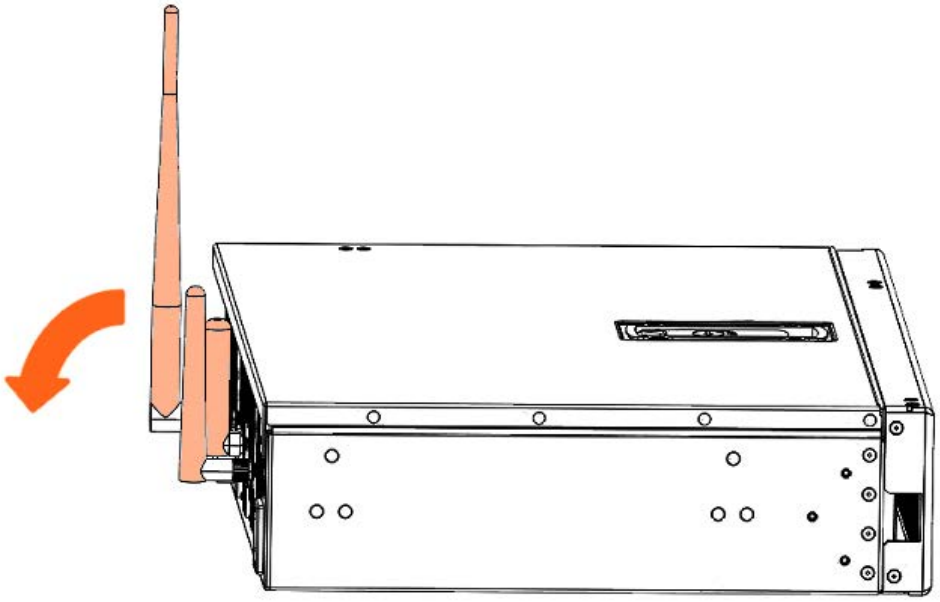

2. Unlock the cover latch.

Front view

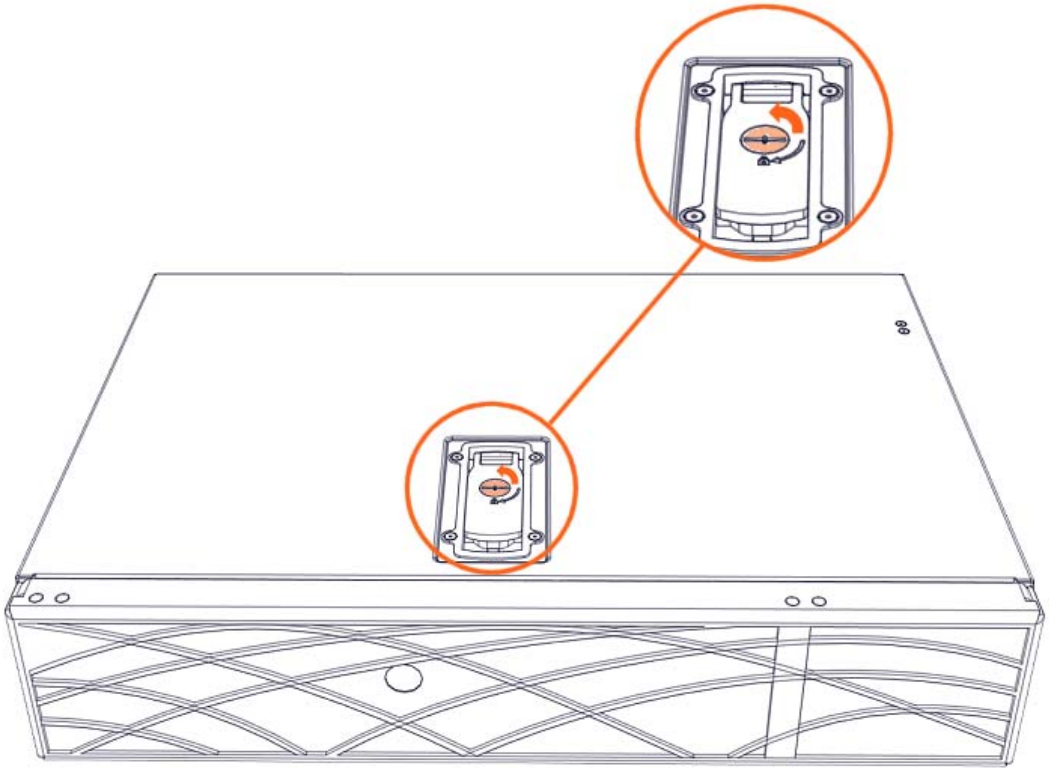

3. Pull the latch up.

Side view

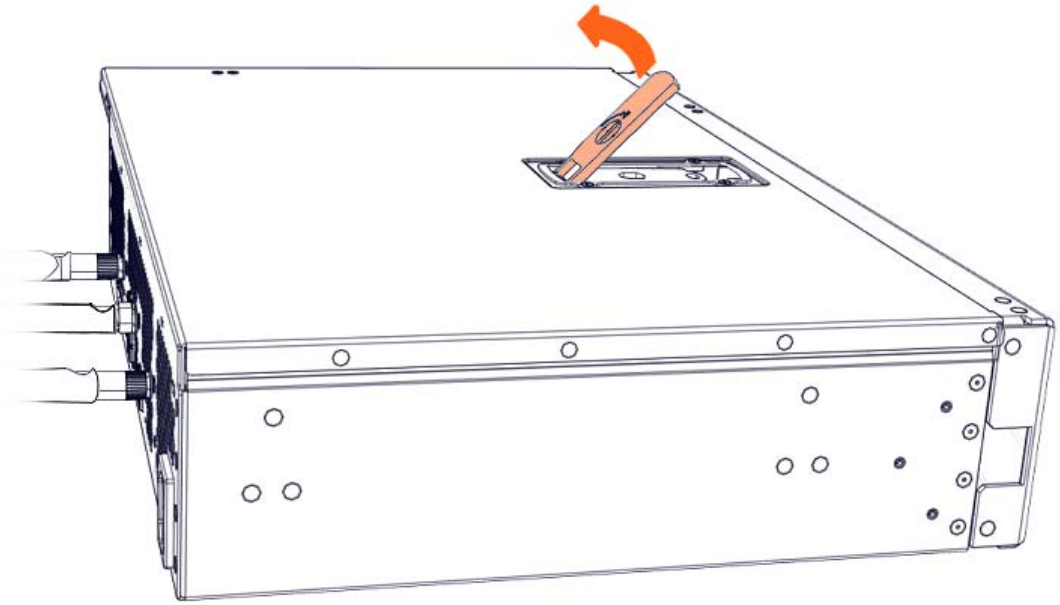

4. Remove the cover.

Front view

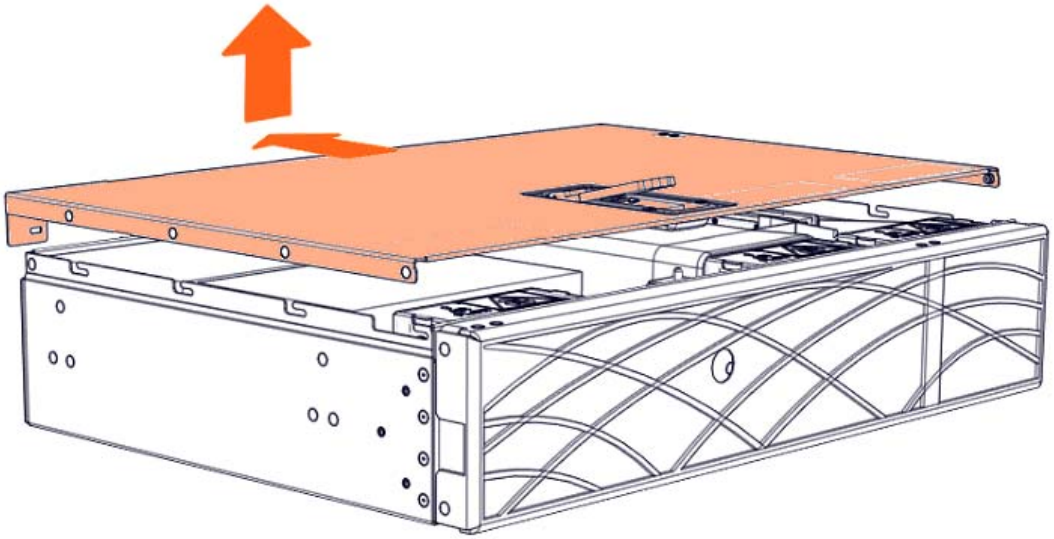

6. **Remove the processor air duct**

Front view

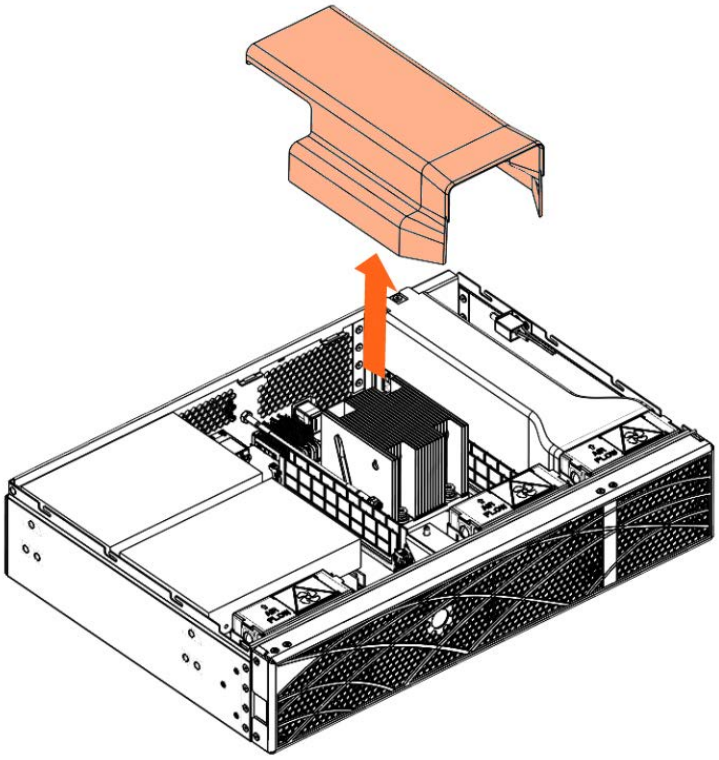

7. **Remove the accelerator air duct if present**

Front view

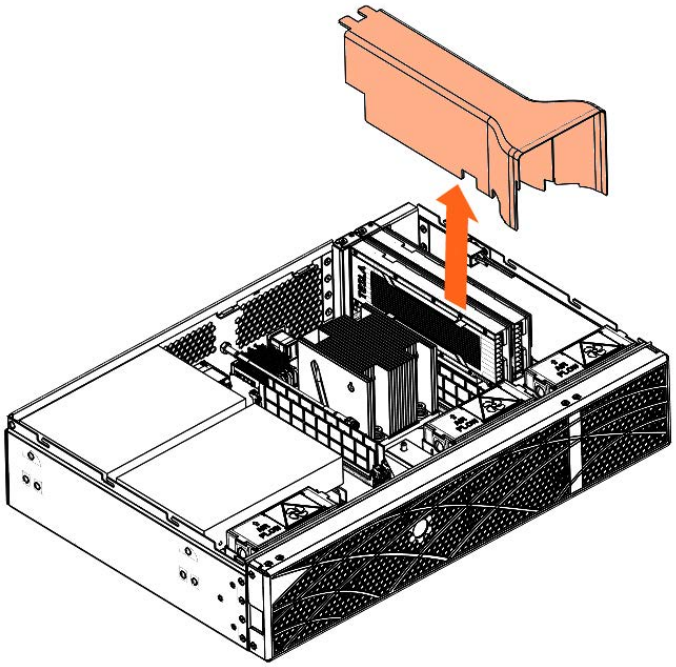

8. Remove the fan

1. Disconnect the fan cable.
2. Press the fan latch (A) in.
3. Pull the fan up.

Front view

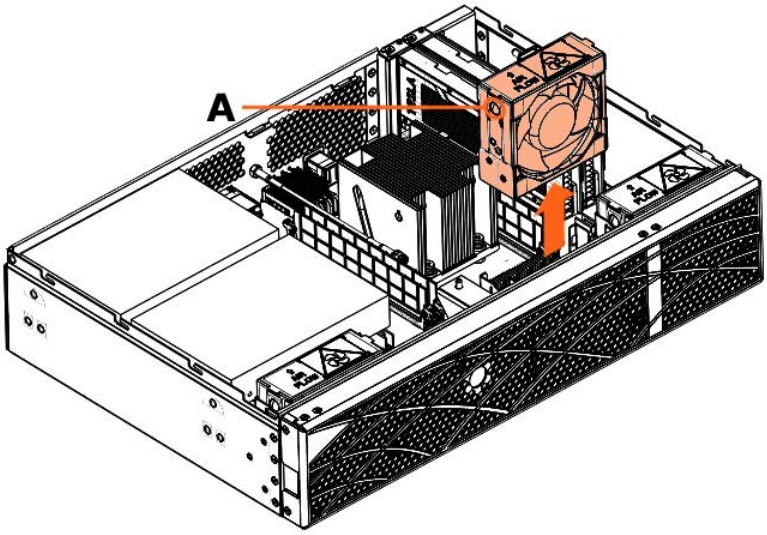

2.2. Installing a fan

Required Tools

None

Procedure

1. **Take hold of the new component**

2. **Install the fan**
   1. Put the fan into place.
   2. Connect the fan cable.

   Front view

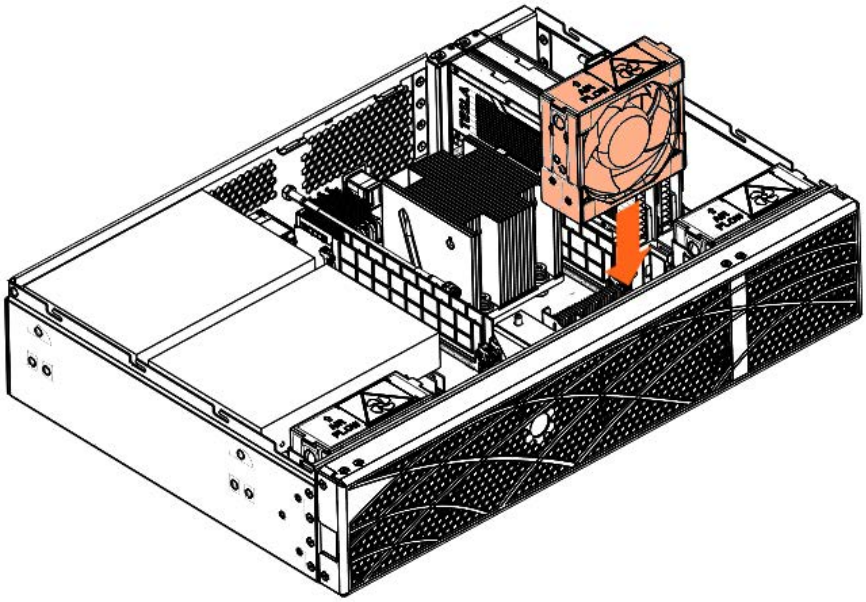

3. **Install the accelerator air duct if present**

Front view

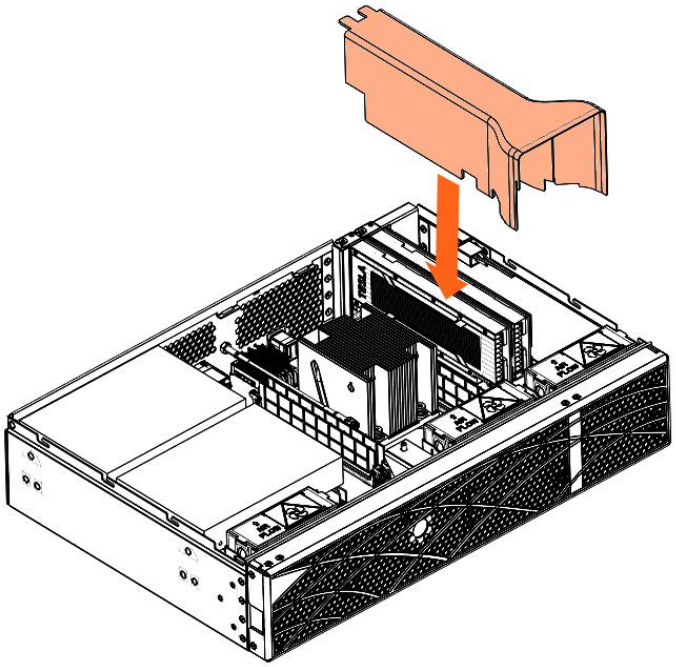

4. **Install the processor air duct**

Front view

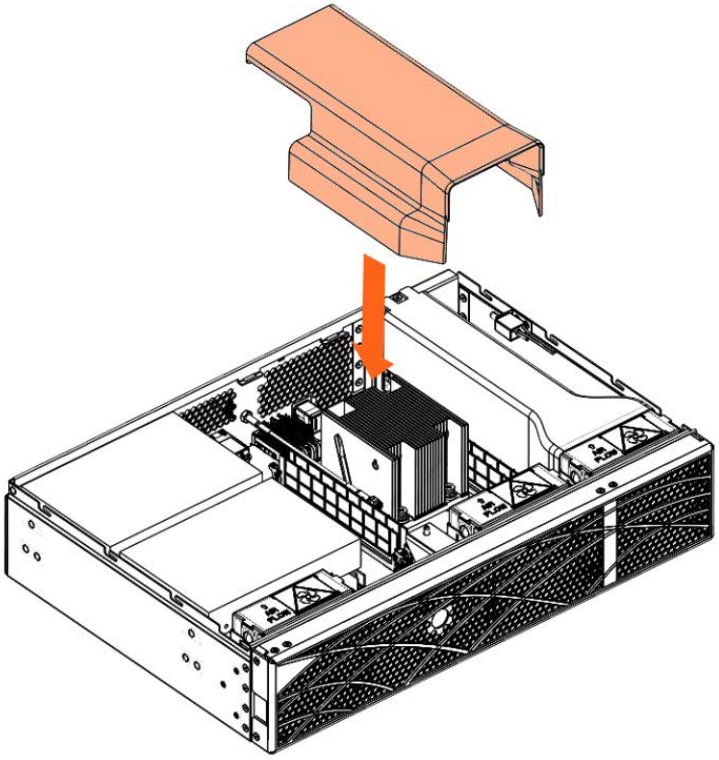

5. Install the cover

1. Put the cover into place.

Front view

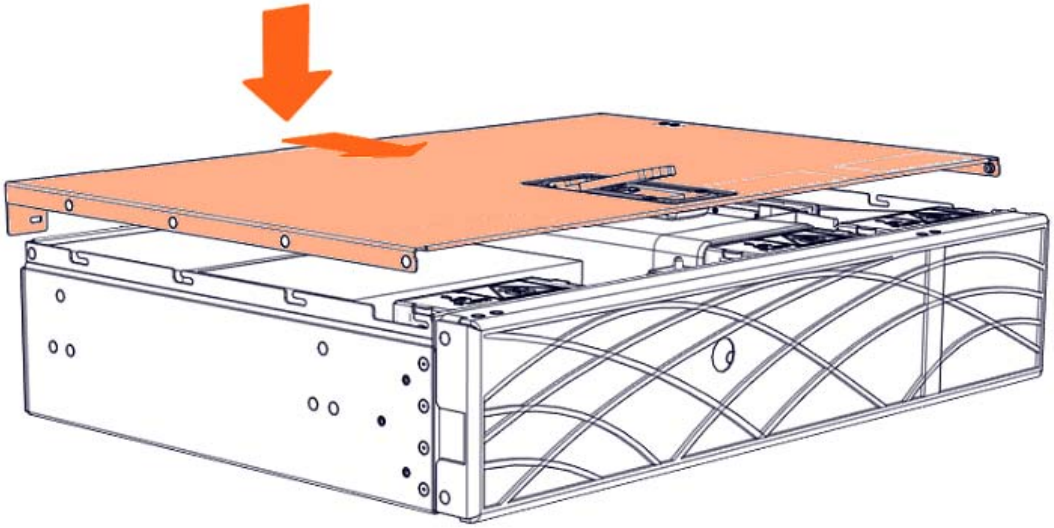

2. Close the latch.

Side view

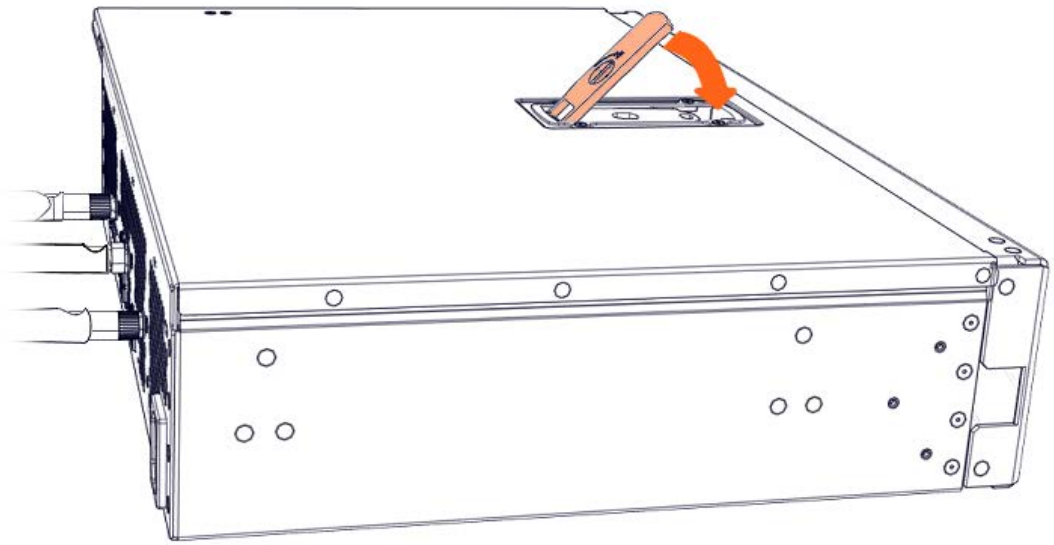

3. Lock the latch to secure the cover in place.

Front view

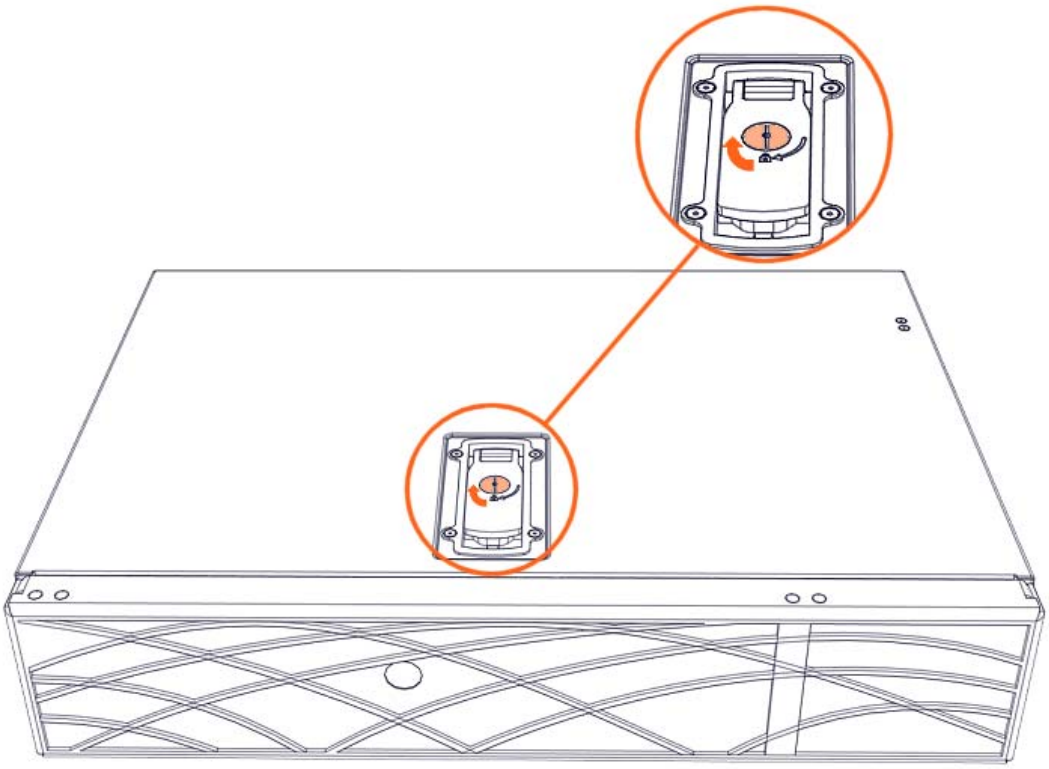

4. Rotate the external antennas to the vertical position.

Side view

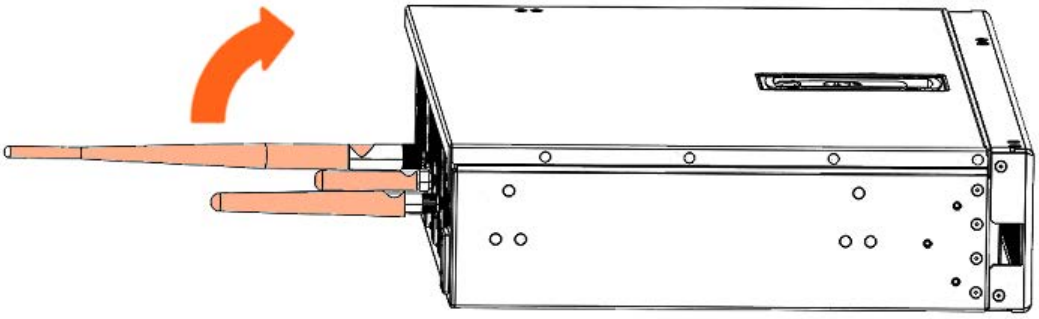

6. Install the top aesthetic cover if aesthetic covers are present

See	Appendix A Servicing the top aesthetic cover

7. **Connect the power supply cable**

Rear view

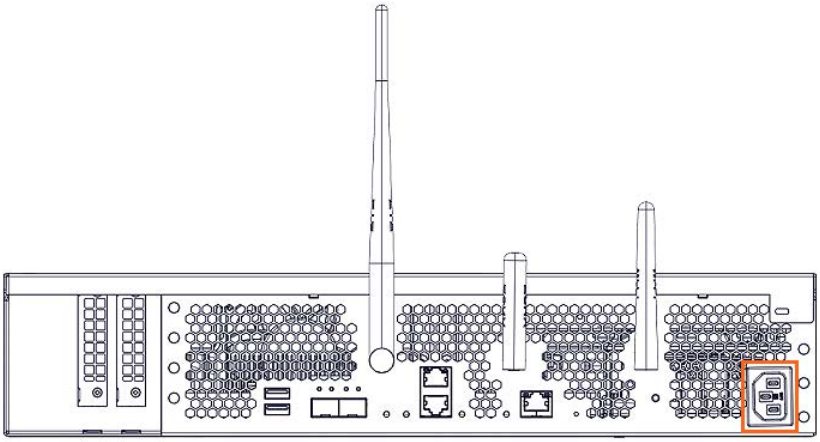

8. **Power on the server**

Chapter 3. Servicing the processor air duct

Important **ATTENTION: Please read carefully the safety instructions before you perform the procedures described in this manual.**
Multilingual Safety Notices Guide

C004 **CAUTION**
C004:
Static electricity can damage the server and other electronic devices. To avoid damage, keep static-sensitive devices in their static-protective packages until you are ready to install them.
To reduce the possibility of damage from electrostatic discharge, observe the following precautions:
Limit your movement. Movement can cause static electricity to build up around you.
Wear an electrostatic-discharge wrist strap.
Handle the device carefully, holding it by its edges or its frame.
Do not touch solder joints, pins, or exposed circuitry.
Do not leave the device where others can handle and damage it.
While the device is still in its static-protective package, touch it to an unpainted metal surface on the outside of the server for at least 2 seconds. This drains static electricity from the package and from your body.
Remove the device from its package and install it directly into the server without setting down the device. If it is necessary to set down the device, put it back into its static-protective package. Do not place the device on the server cover or on a metal surface.
Take additional care when you handle devices during cold weather. Heating reduces indoor humidity and increases static electricity.

See BullSequana Edge Description Guide, 86 A1 65FR to locate the processor air duct.

3.1. Removing the processor air duct

Required Tools

None

Procedure

1. **Unpack the new component on a clean ESD-protected work surface**

2. **Power off the server**

3. **Disconnect the power supply cable**

   Rear view

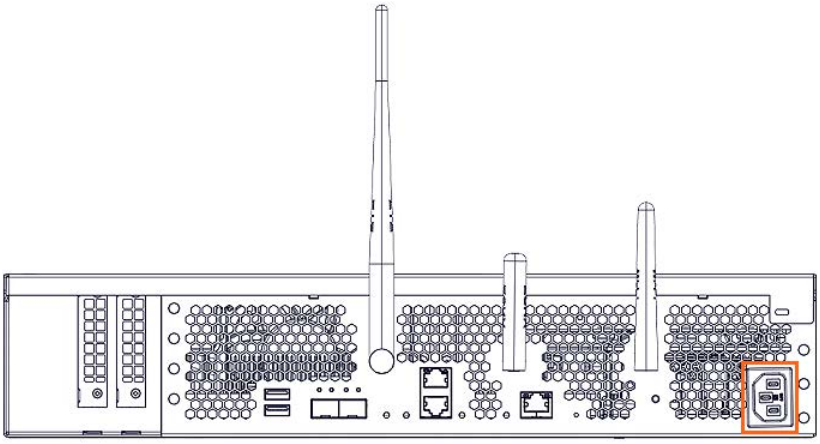

4. **Remove the top aesthetic cover if aesthetic covers are present**

See	Appendix A Servicing the top aesthetic cover

5. Remove the cover

1. Rotate the external antennas to the horizontal position.

Side view

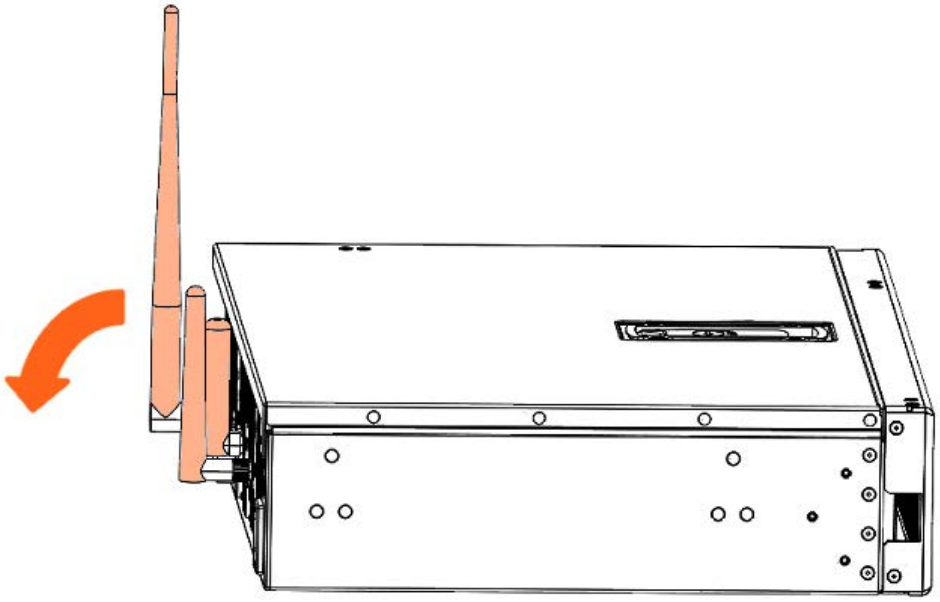

2. Unlock the cover latch.

Front view

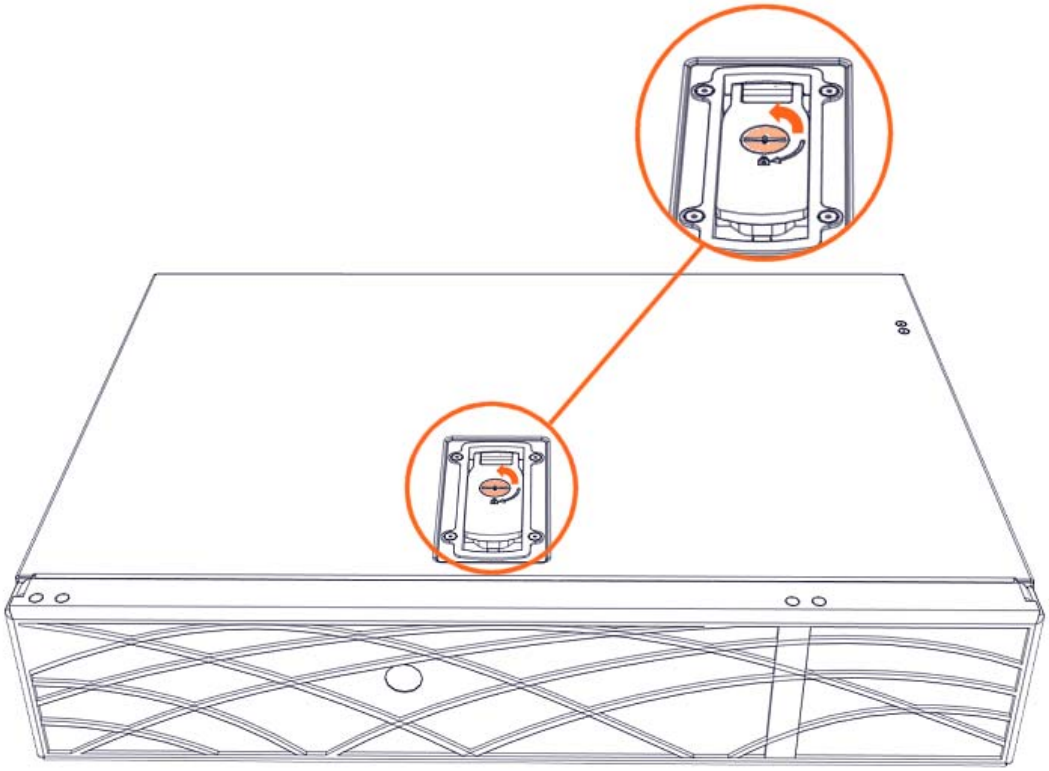

3. Pull the latch up.

Side view

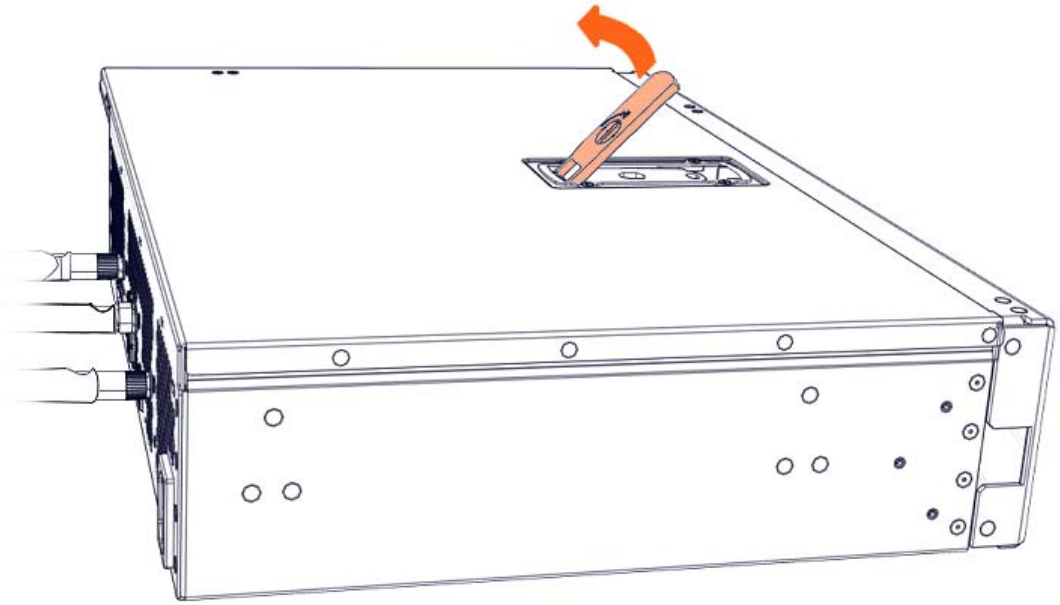

4. Remove the cover.

Front view

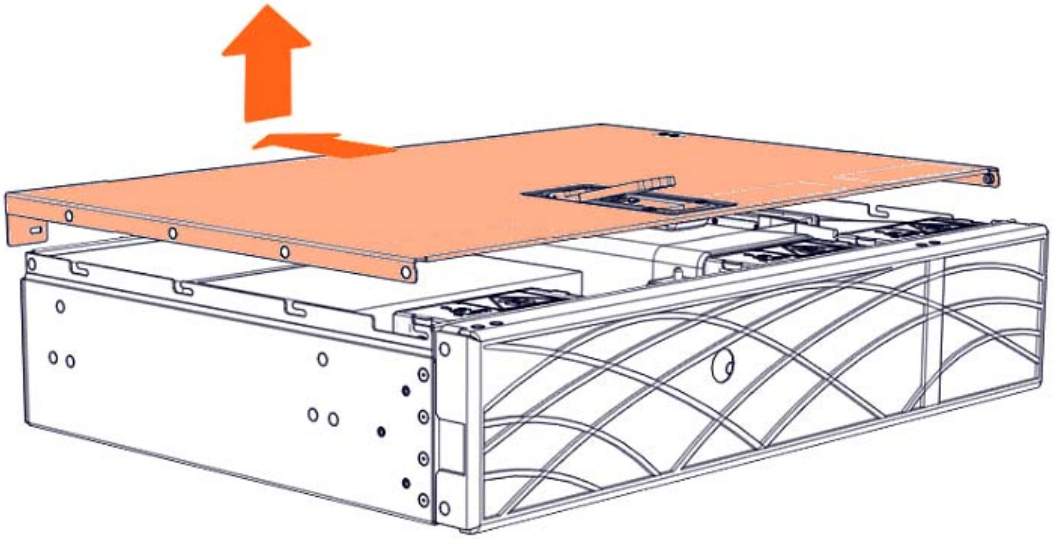

6. Remove the processor air duct

Front view

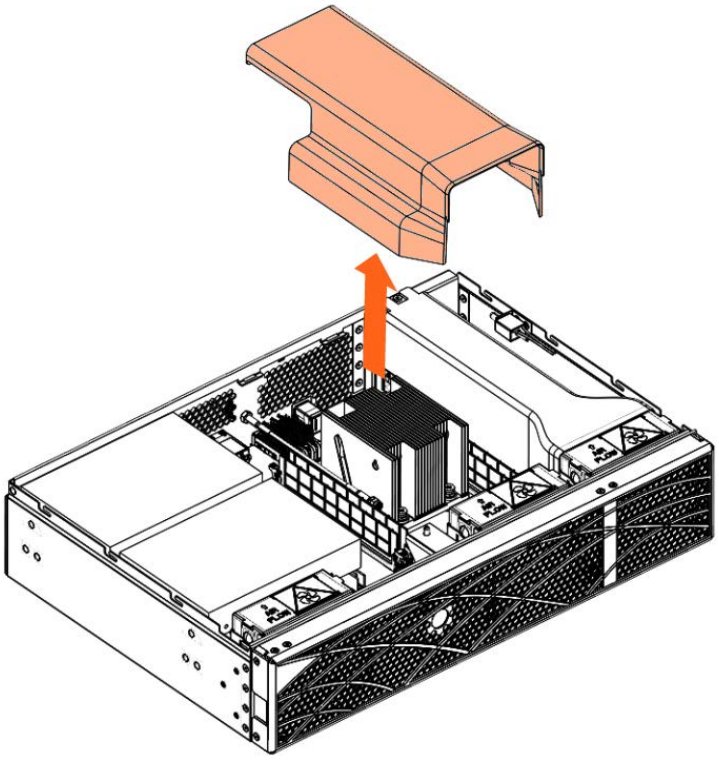

3.2. Installing the processor air duct

Required Tools

None

Procedure

1. **Take hold of the new component**

2. **Install the processor air duct**

   Front view

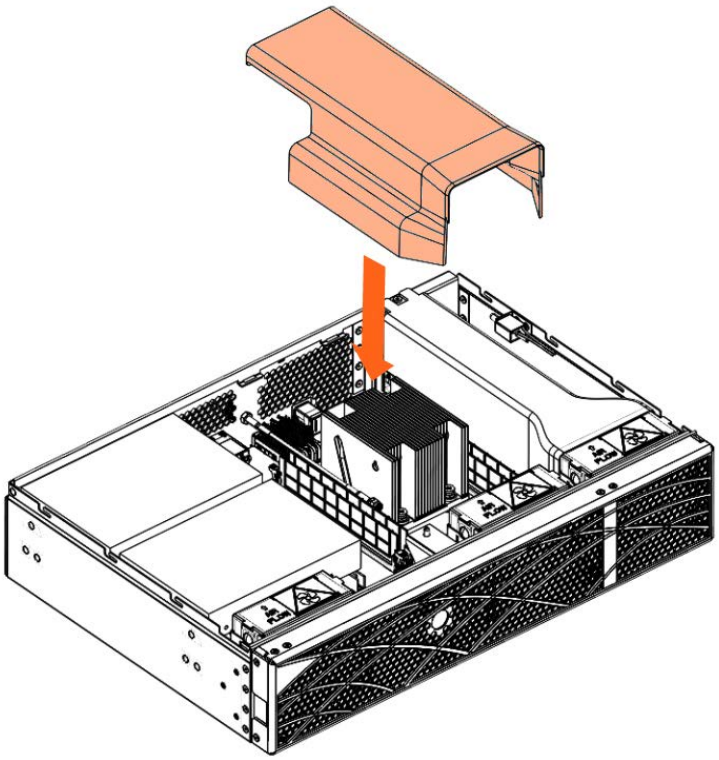

3. Install the cover

1. Put the cover into place.

Front view

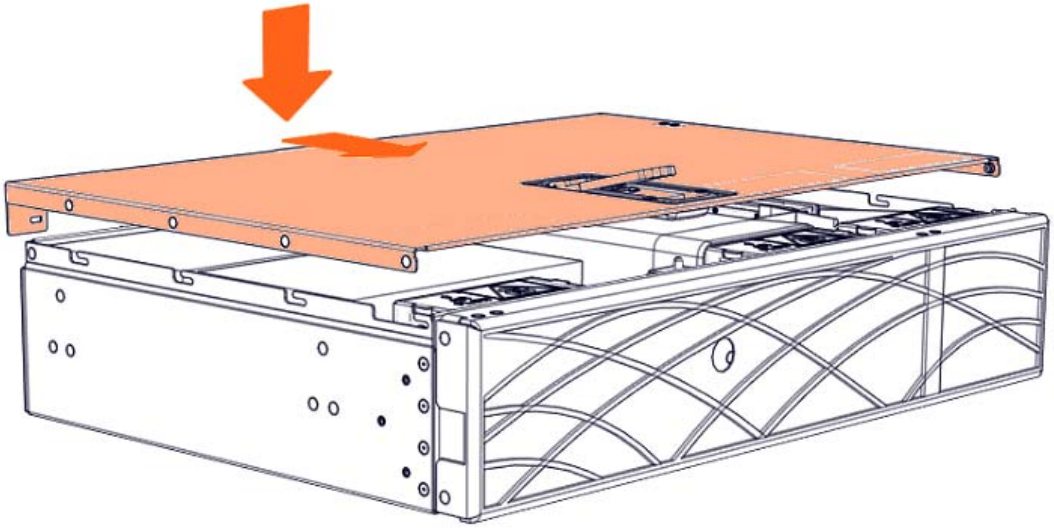

2. Close the latch.

Side view

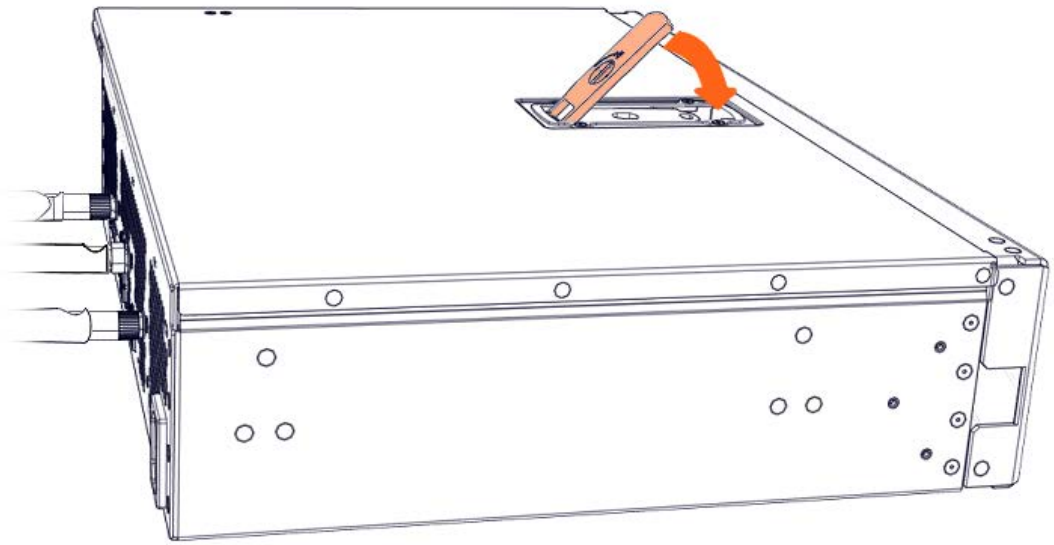

3. Lock the latch to secure the cover in place.

Front view

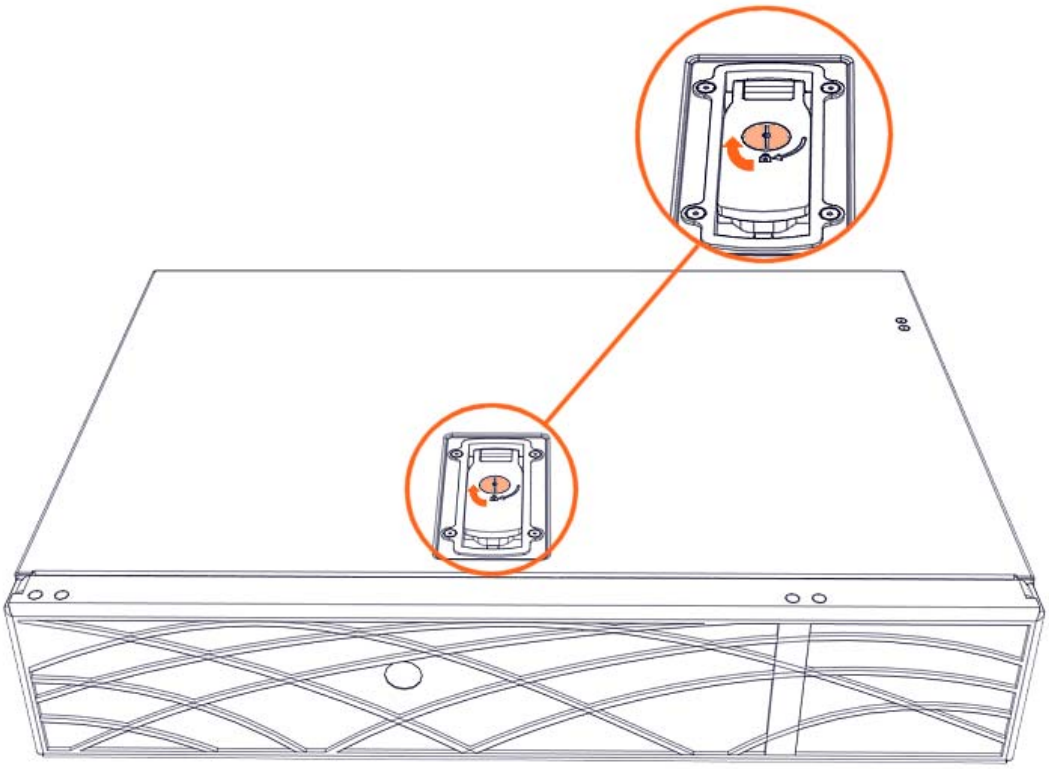

4. Rotate the external antennas to the vertical position.

Side view

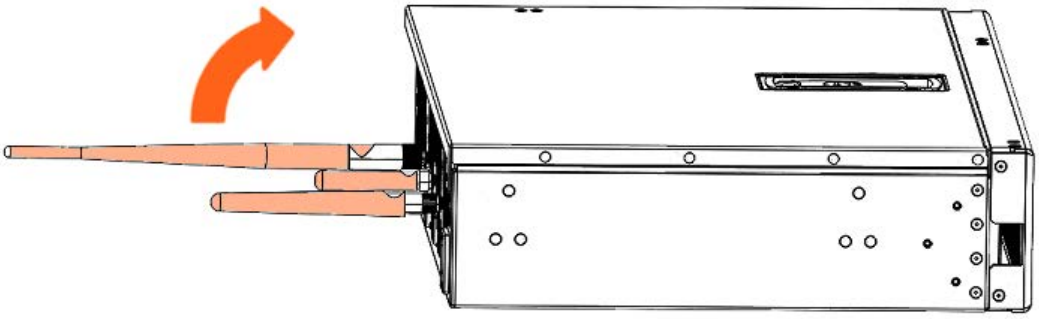

4. Install the top aesthetic cover if aesthetic covers are present

See	Appendix A Servicing the top aesthetic cover

5. **Connect the power supply cable**

Rear view

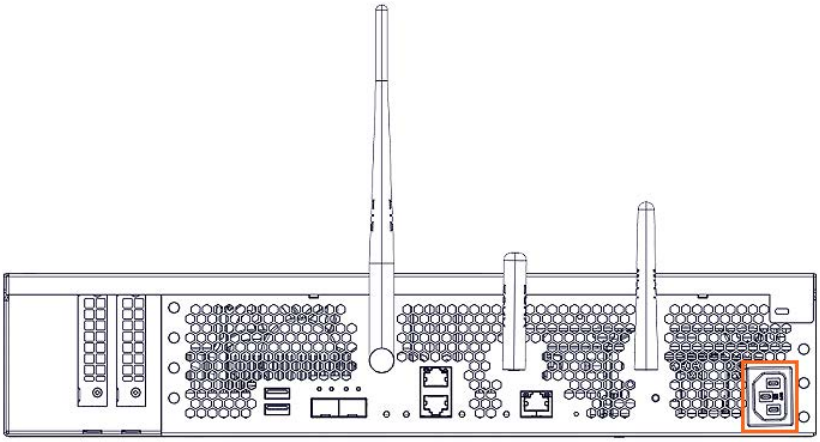

6. **Power on the server**

Chapter 4. Servicing a memory module

Important **ATTENTION: Please read carefully the safety instructions before you perform the procedures described in this manual.**
Multilingual Safety Notices Guide

C004 **CAUTION**
C004:
Static electricity can damage the server and other electronic devices. To avoid damage, keep static-sensitive devices in their static-protective packages until you are ready to install them.
To reduce the possibility of damage from electrostatic discharge, observe the following precautions:
Limit your movement. Movement can cause static electricity to build up around you.
Wear an electrostatic-discharge wrist strap.
Handle the device carefully, holding it by its edges or its frame.
Do not touch solder joints, pins, or exposed circuitry.
Do not leave the device where others can handle and damage it.
While the device is still in its static-protective package, touch it to an unpainted metal surface on the outside of the server for at least 2 seconds. This drains static electricity from the package and from your body.
Remove the device from its package and install it directly into the server without setting down the device. If it is necessary to set down the device, put it back into its static-protective package. Do not place the device on the server cover or on a metal surface.
Take additional care when you handle devices during cold weather. Heating reduces indoor humidity and increases static electricity.

See BullSequana Edge Description Guide, 86 A1 65FR to locate the memory module.

4.1. Removing a memory module

Required Tools

None

Procedure

1. **Unpack the new component on a clean ESD-protected work surface**

2. **Power off the server**

3. **Disconnect the power supply cable**

   Rear view

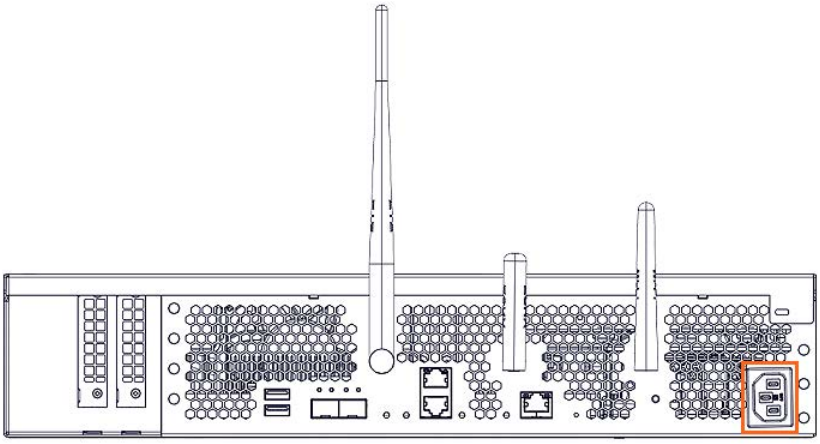

4. **Remove the top aesthetic cover if aesthetic covers are present**

See	Appendix A Servicing the top aesthetic cover

5. Remove the cover

1. Rotate the external antennas to the horizontal position.

Side view

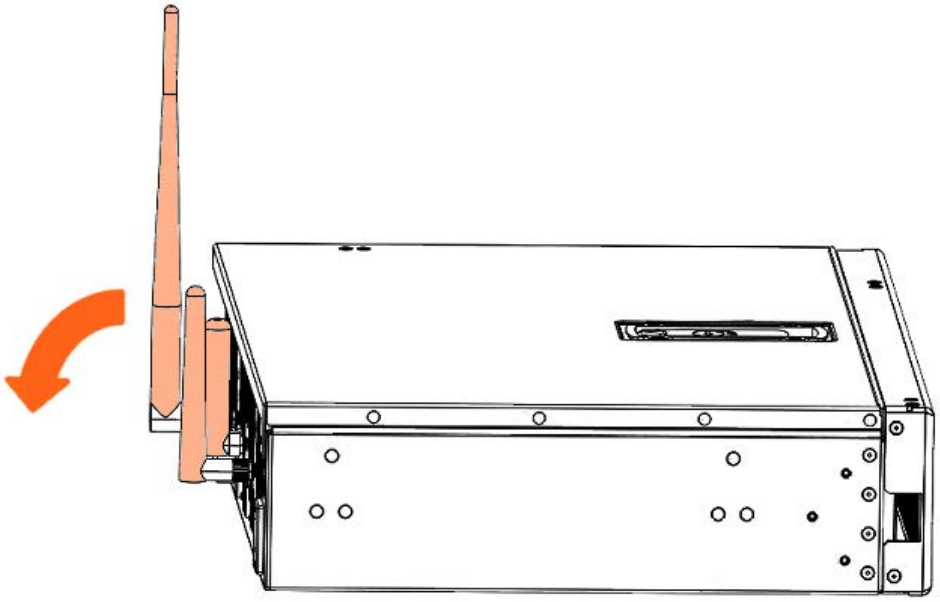

2. Unlock the cover latch.

Front view

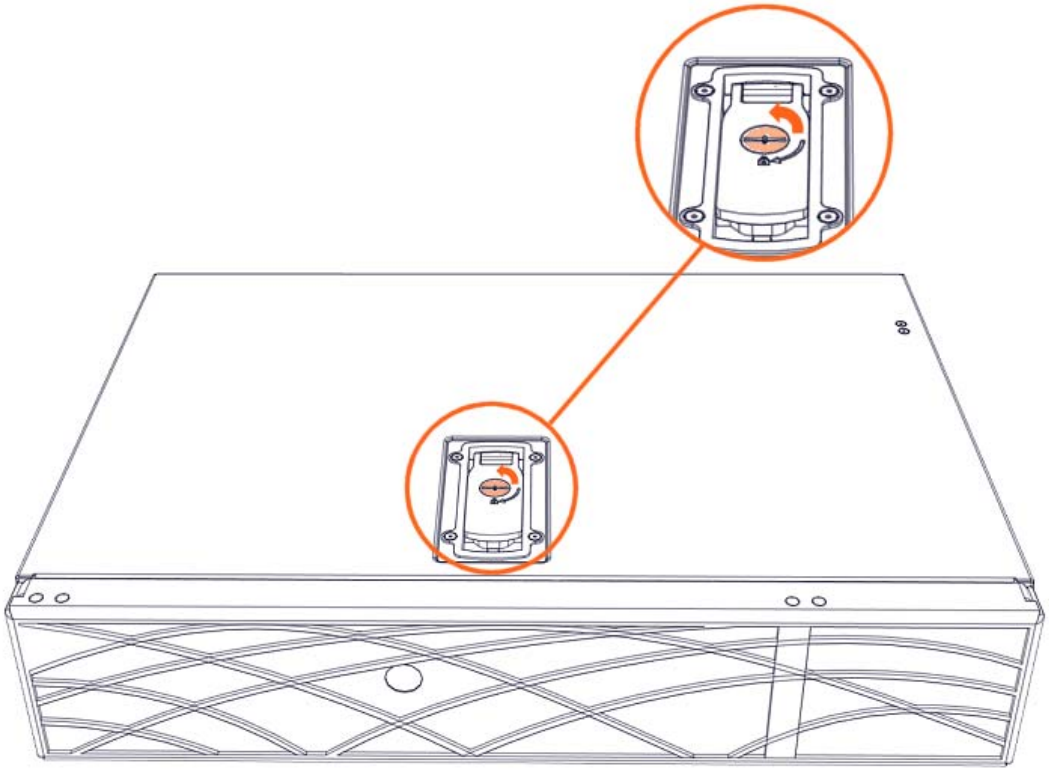

3. Pull the latch up.

Side view

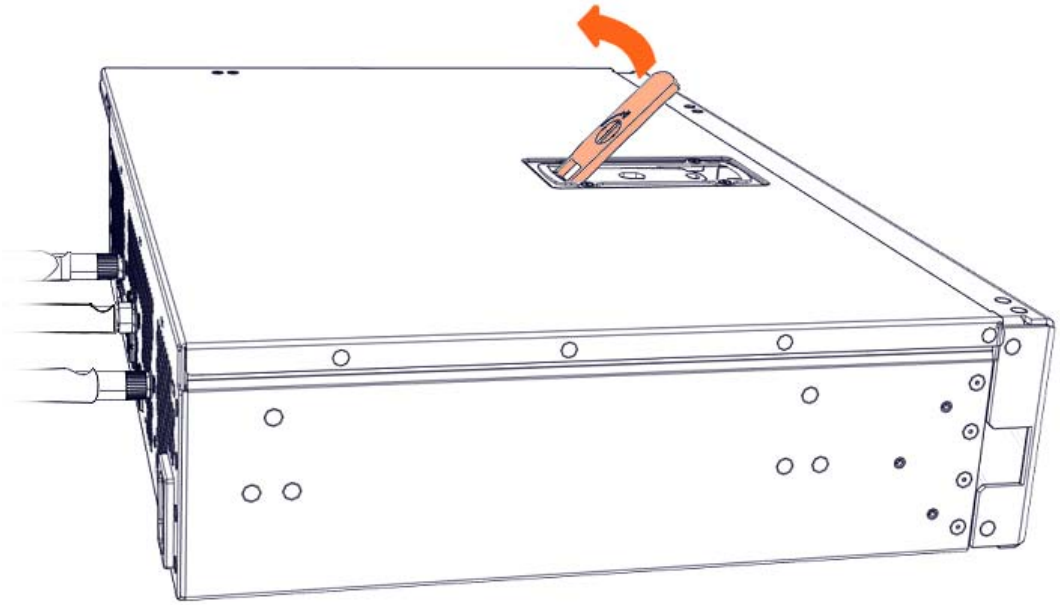

4. Remove the cover.

Front view

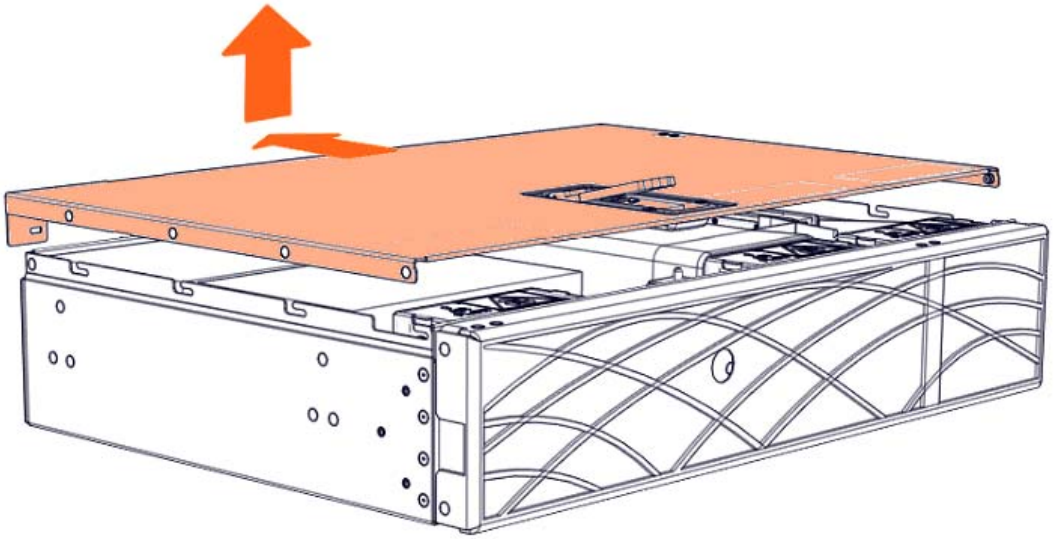

6. **Remove the processor air duct**

Front view

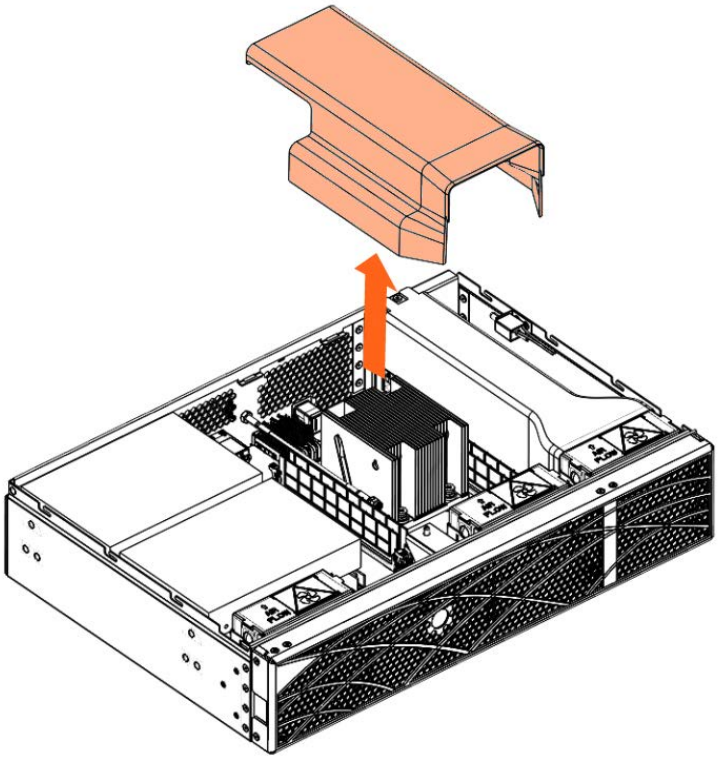

7. **Remove the memory module**

Important	**Always hold the module by the edges to avoid electrical and structural damage.**

1. Press the retention latches down to release the memory module

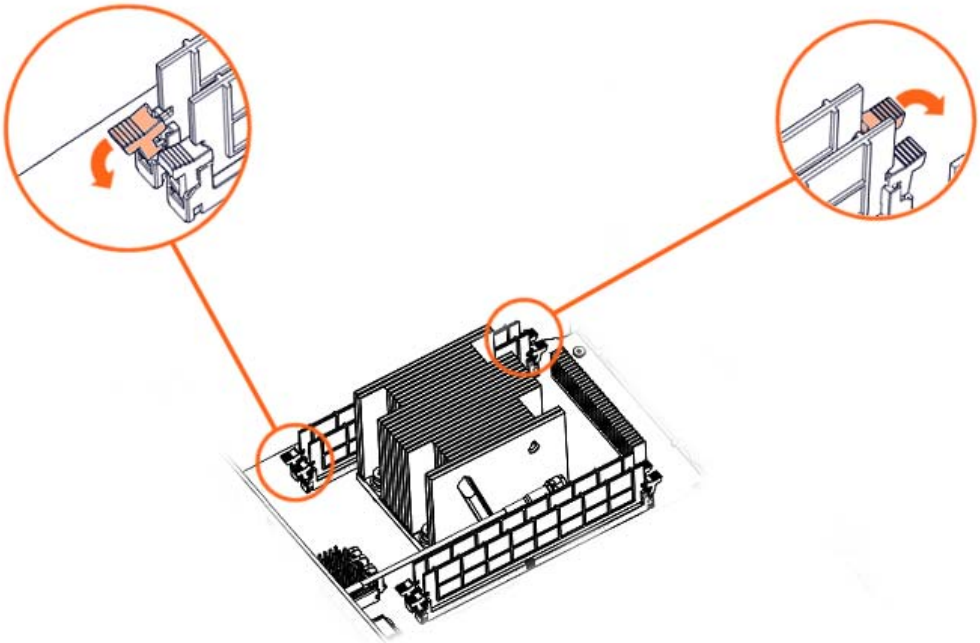

2. Remove the memory module

Front view

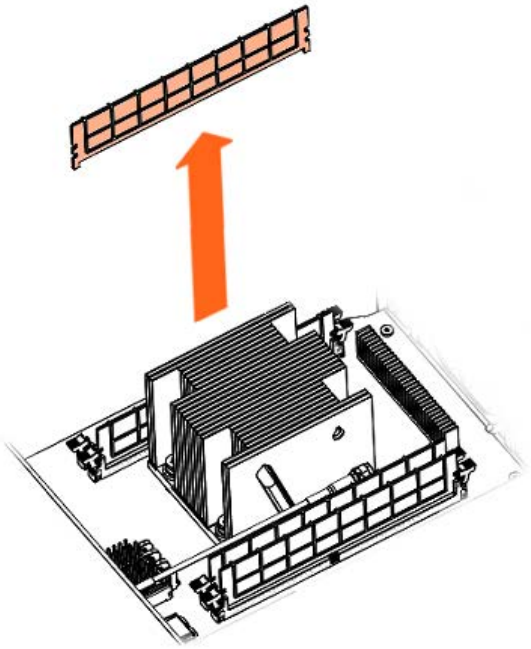

4.2. Installing a memory module

Required Tools

None

Procedure

1. **Take hold of the new component**

2. **Install the memory module**

Important	**Always hold the module by the edges to avoid electrical and structural damage.**

1. Make sure that the retention latches at both ends of the memory module connector are pushed outward to the open position.

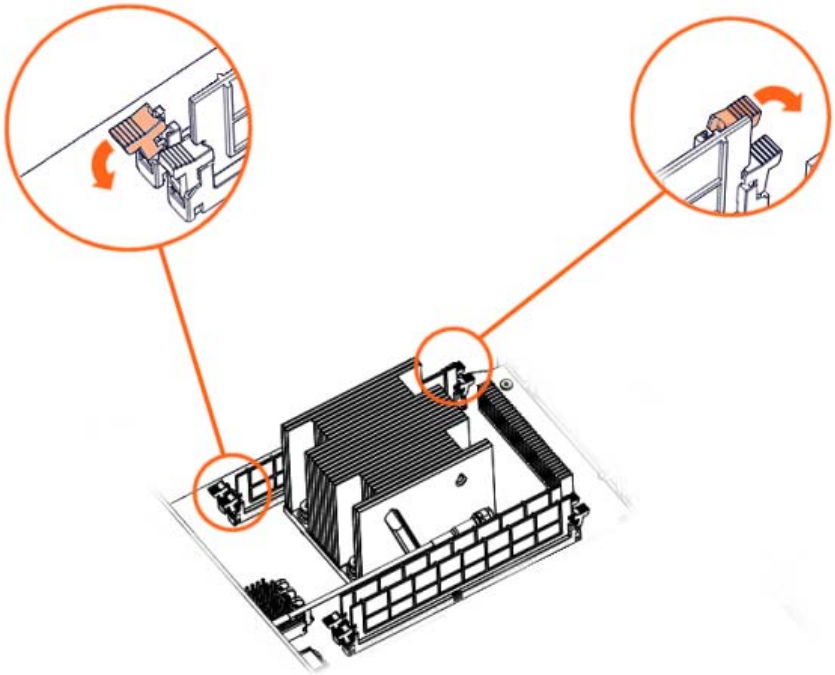

2. Carefully push down on each side of the memory module until it sits in the slot and the retention latches close.

Front view

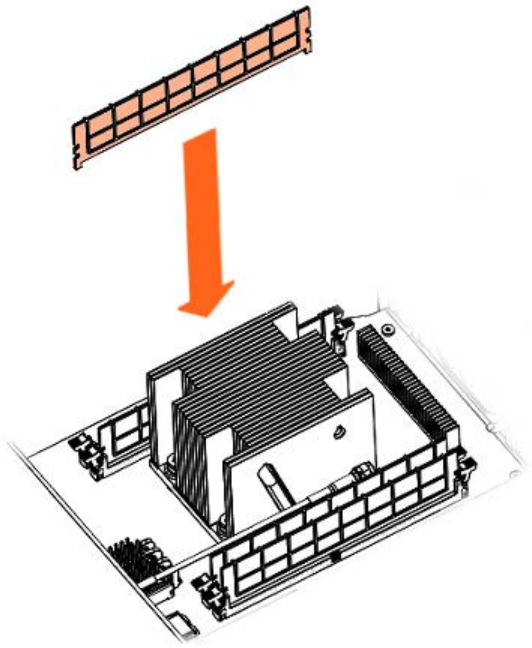

3. **Install the processor air duct**

Front view

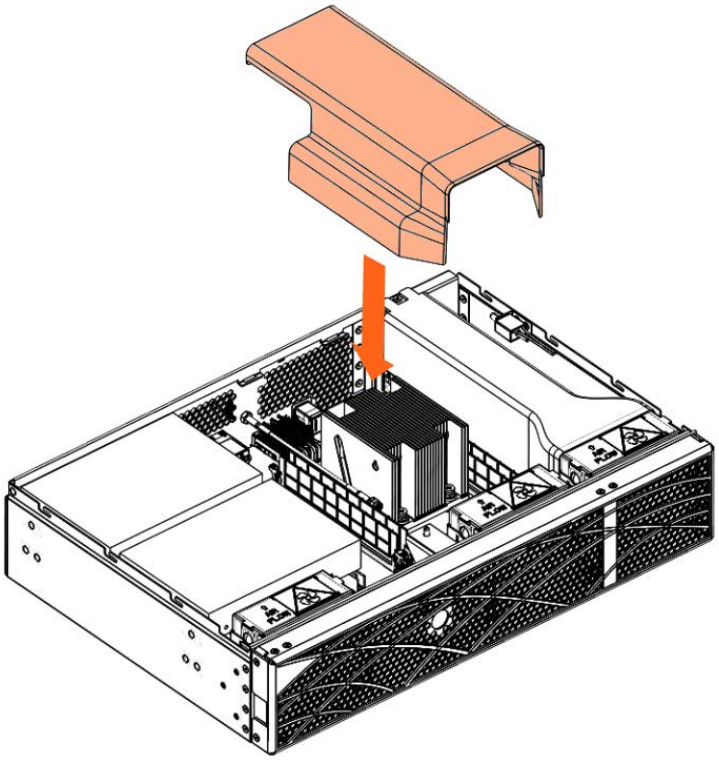

4. Install the cover

1. Put the cover into place.

Front view

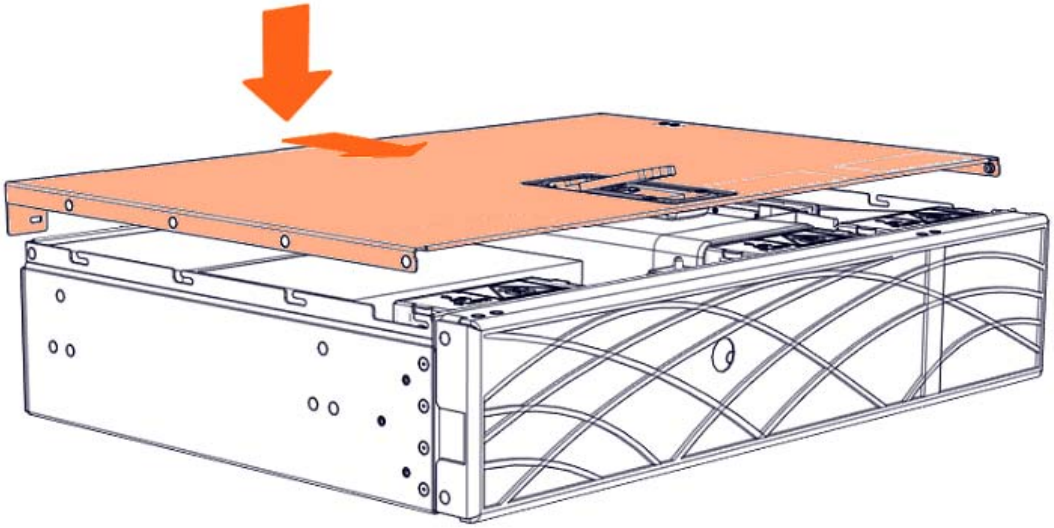

2. Close the latch.

Side view

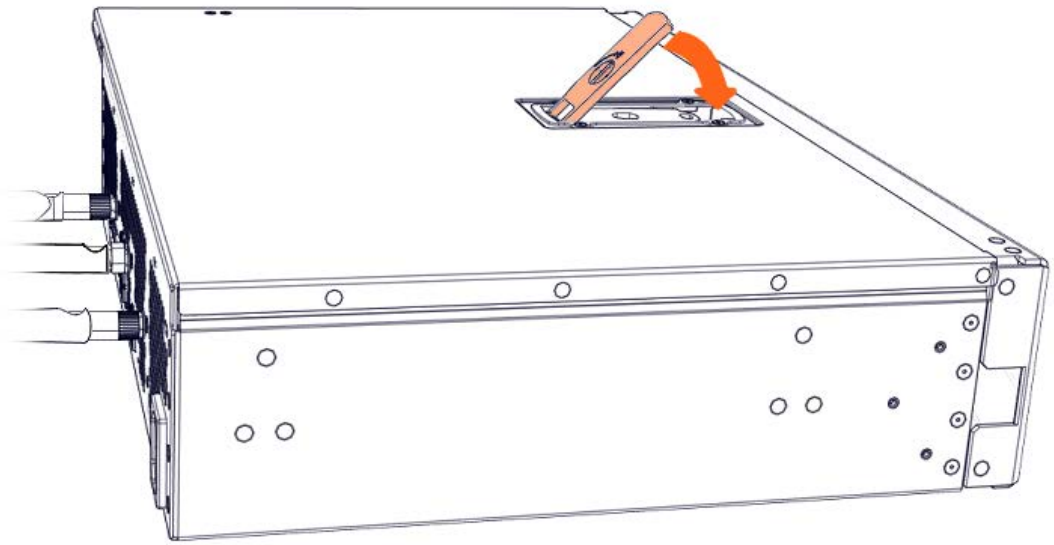

3. Lock the latch to secure the cover in place.

Front view

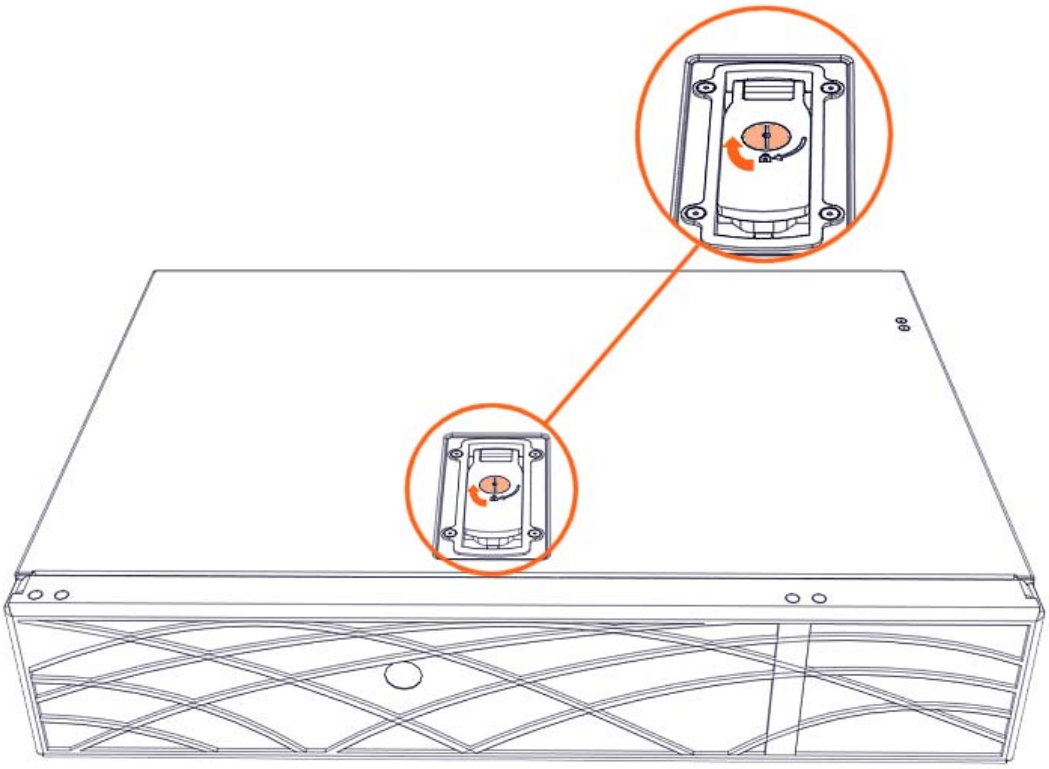

4. Rotate the external antennas to the vertical position.

Side view

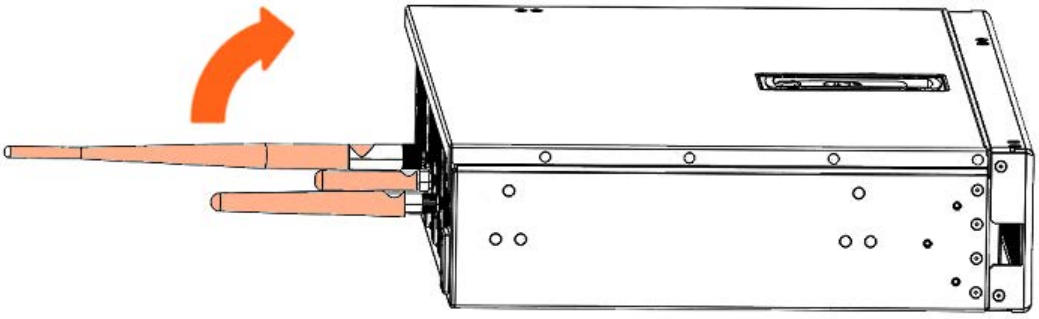

5. Install the top aesthetic cover if aesthetic covers are present

See	Appendix A Servicing the top aesthetic cover

6. **Connect the power supply cable**

Rear view

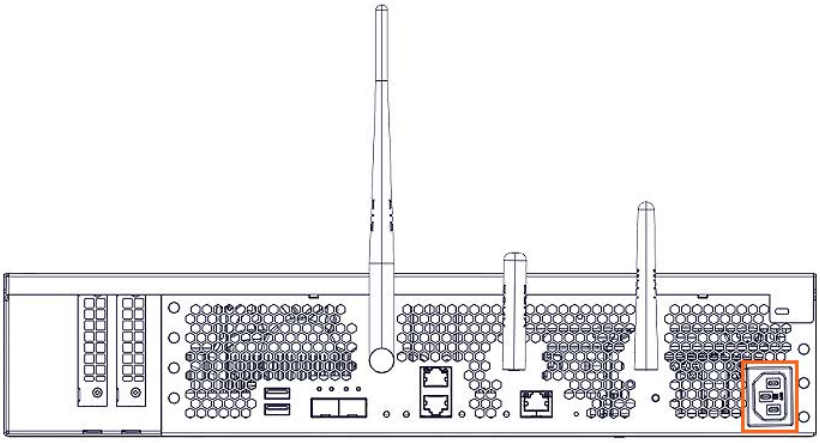

7. **Power on the server**

Chapter 5. Servicing an accelerator

Important **ATTENTION: Please read carefully the safety instructions before you perform the procedures described in this manual.**
Multilingual Safety Notices Guide

C004 **CAUTION**
C004:
Static electricity can damage the server and other electronic devices. To avoid damage, keep static-sensitive devices in their static-protective packages until you are ready to install them.
To reduce the possibility of damage from electrostatic discharge, observe the following precautions:
Limit your movement. Movement can cause static electricity to build up around you.
Wear an electrostatic-discharge wrist strap.
Handle the device carefully, holding it by its edges or its frame.
Do not touch solder joints, pins, or exposed circuitry.
Do not leave the device where others can handle and damage it.
While the device is still in its static-protective package, touch it to an unpainted metal surface on the outside of the server for at least 2 seconds. This drains static electricity from the package and from your body.
Remove the device from its package and install it directly into the server without setting down the device. If it is necessary to set down the device, put it back into its static-protective package. Do not place the device on the server cover or on a metal surface.
Take additional care when you handle devices during cold weather. Heating reduces indoor humidity and increases static electricity.

See BullSequana Edge Description Guide, 86 A1 65FR to locate the accelerator.

5.1. Removing an accelerator

Required Tools

T10 Torx screwdriver

Procedure

1. **Unpack the new component on a clean ESD-protected work surface**

2. **Power off the server**

3. **Disconnect the power supply cable**

   Rear view

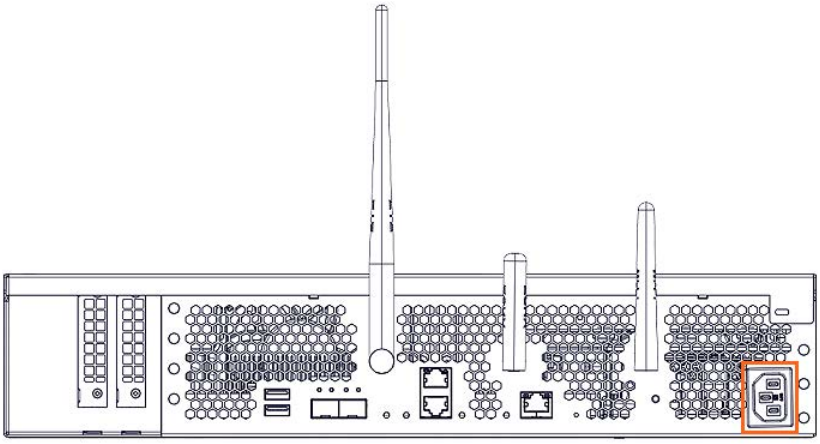

4. **Remove the top aesthetic cover if aesthetic covers are present**

See	Appendix A Servicing the top aesthetic cover

5. Remove the cover

1. Rotate the external antennas to the horizontal position.

Side view

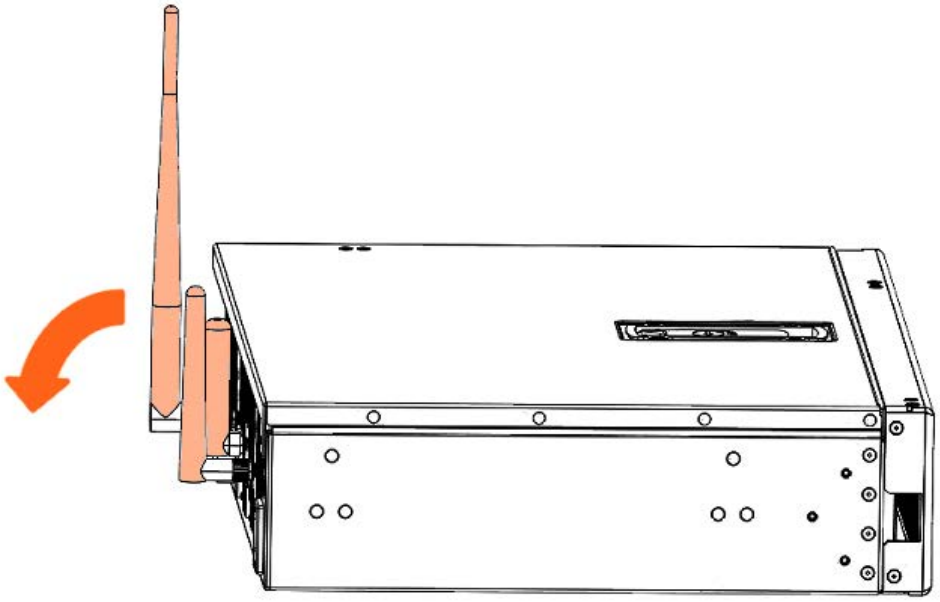

2. Unlock the cover latch.

Front view

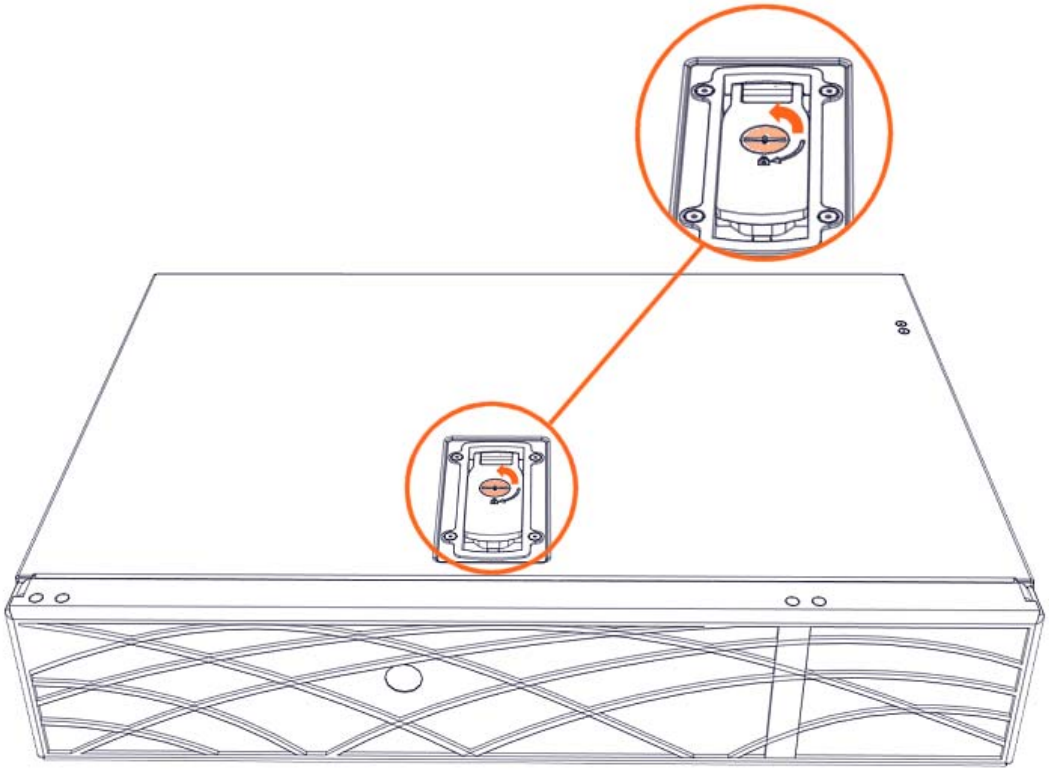

3. Pull the latch up.

Side view

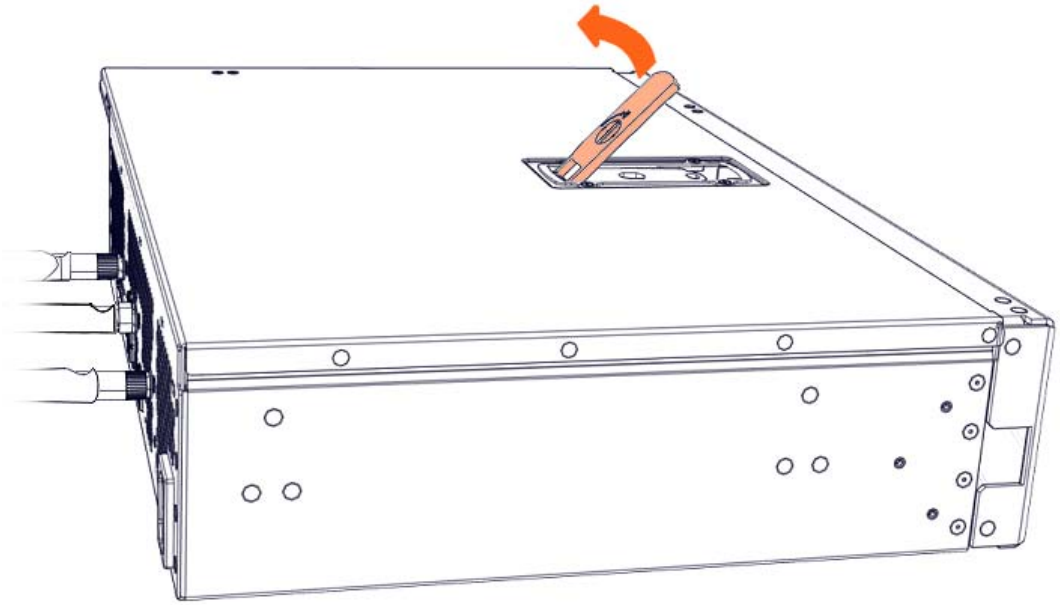

4. Remove the cover.

Front view

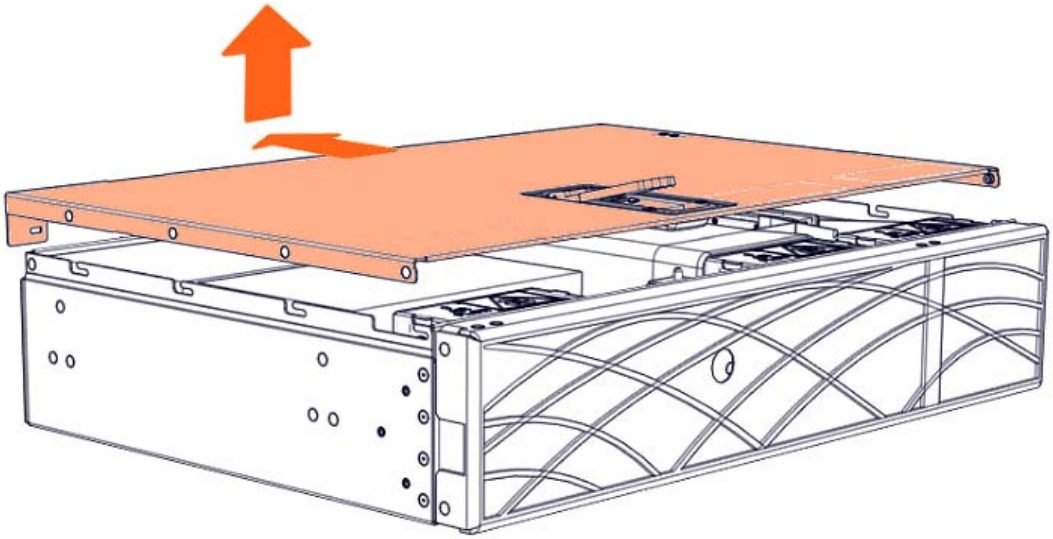

6. **Remove the accelerator air duct if present**

Front view

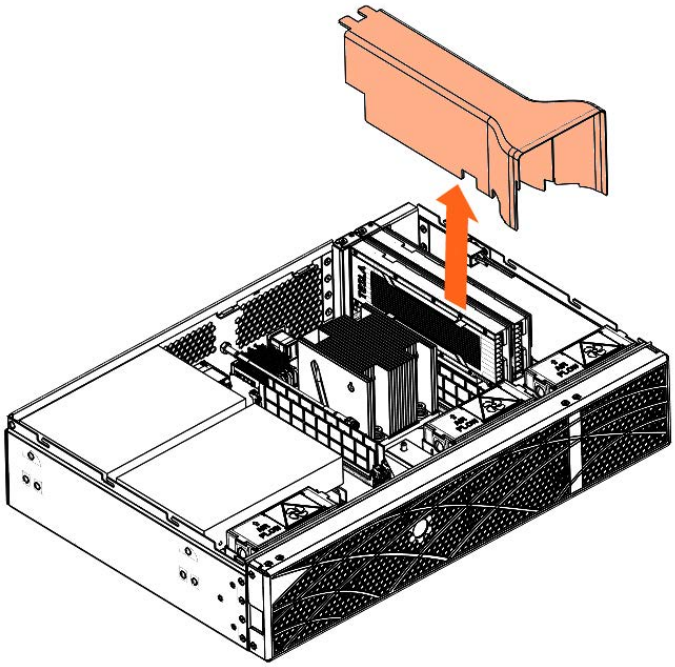

7. Remove the accelerator

1. Remove the screw.
2. Pull the accelerator out.

Front view

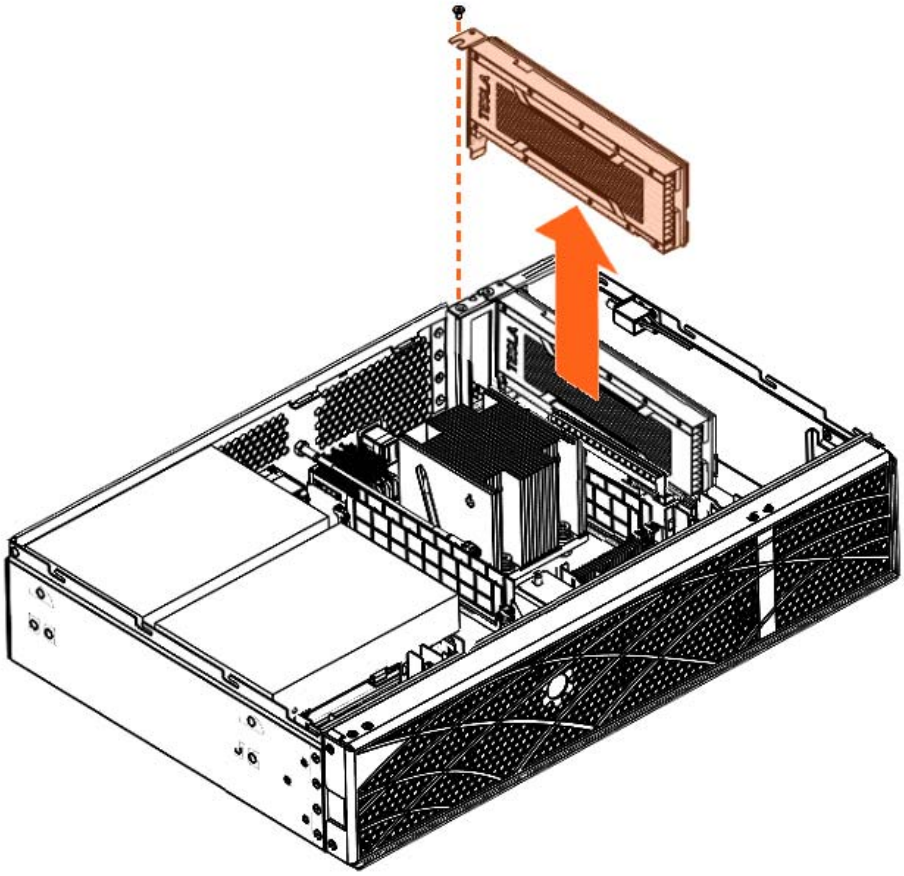

5.2. Installing an accelerator

Required Tools

T10 Torx screwdriver

Procedure

1. **Take hold of the new component**

2. **Install the accelerator**
   1. Position the accelerator.
   2. Tighten the screw.

   Top view

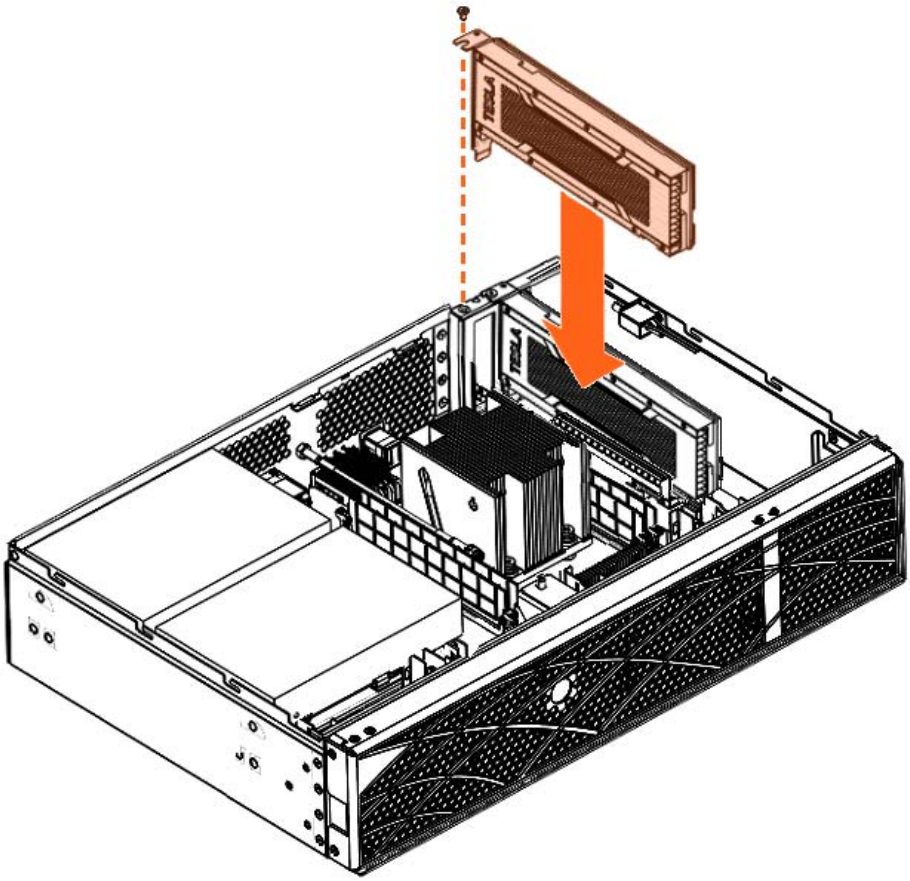

3. **Install the accelerator air duct if present**

Front view

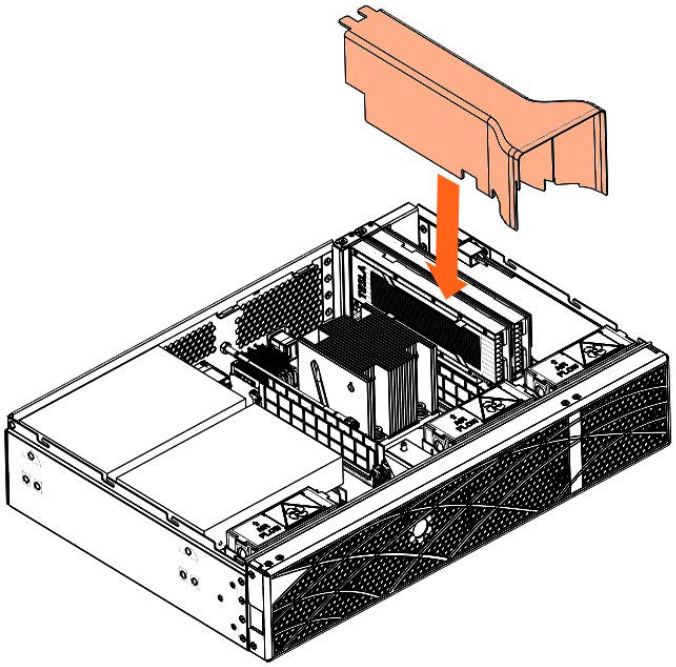

4. **Install the cover**

   1. Put the cover into place.

Front view

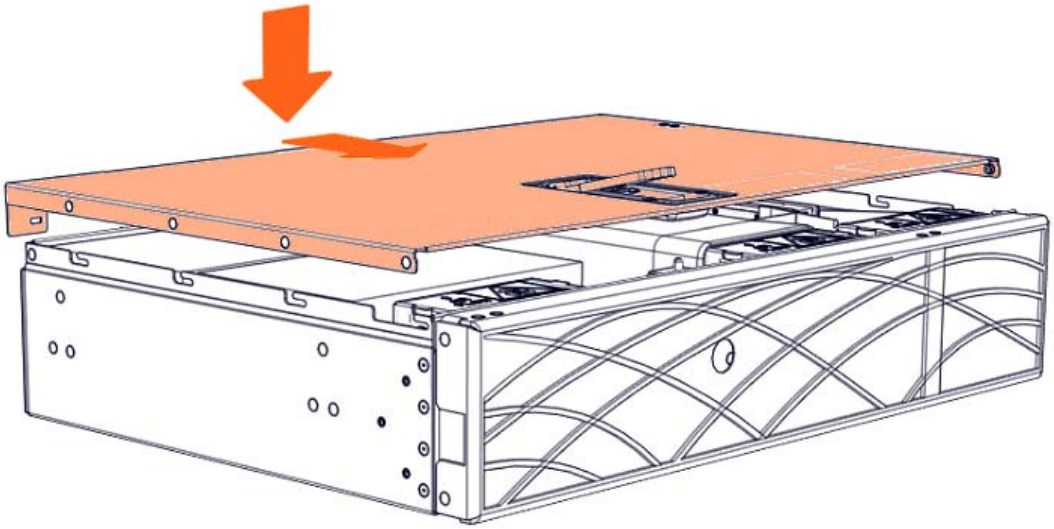

2. Close the latch.

Side view

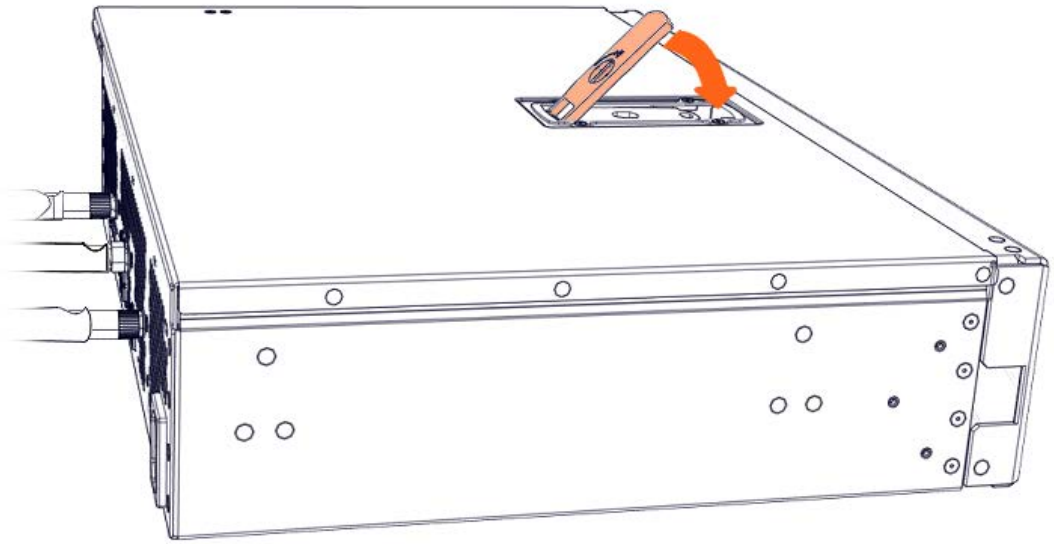

3. Lock the latch to secure the cover in place.

Front view

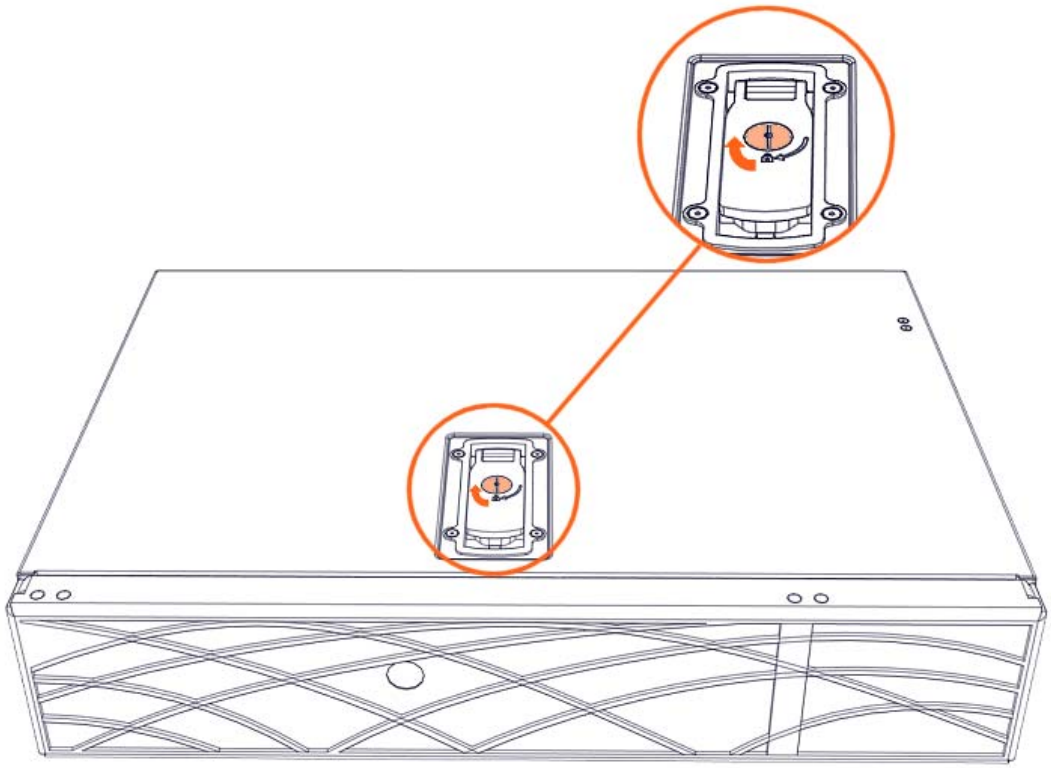

4. Rotate the external antennas to the vertical position.

Side view

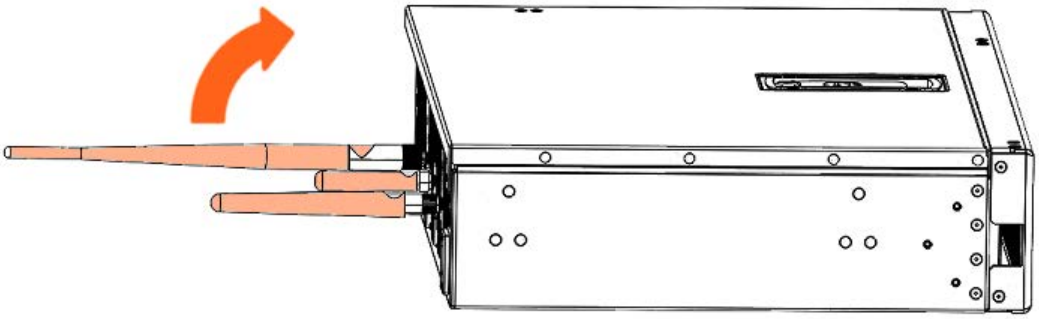

5. Install the top aesthetic cover if aesthetic covers are present

See Appendix A Servicing the top aesthetic cover

6. Connect the power supply cable

Rear view

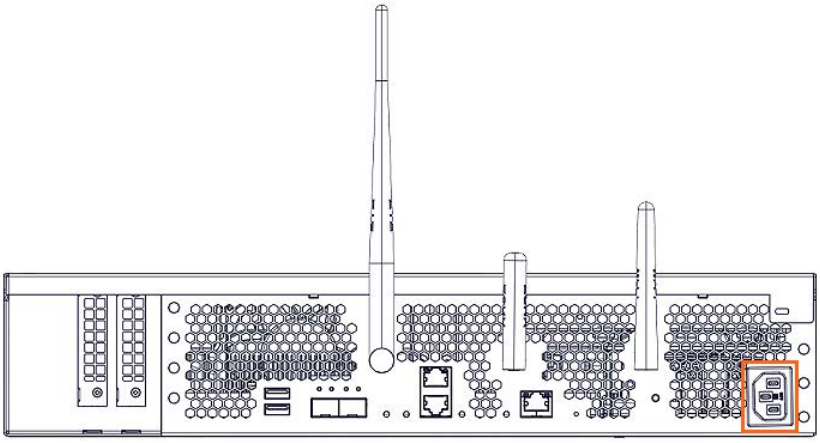

7. Power on the server

Chapter 6. Servicing a 2.5" disk

Important **ATTENTION: Please read carefully the safety instructions before you perform the procedures described in this manual.**
Multilingual Safety Notices Guide

C004 **CAUTION**
C004:
Static electricity can damage the server and other electronic devices. To avoid damage, keep static-sensitive devices in their static-protective packages until you are ready to install them.
To reduce the possibility of damage from electrostatic discharge, observe the following precautions:
Limit your movement. Movement can cause static electricity to build up around you.
Wear an electrostatic-discharge wrist strap.
Handle the device carefully, holding it by its edges or its frame.
Do not touch solder joints, pins, or exposed circuitry.
Do not leave the device where others can handle and damage it.
While the device is still in its static-protective package, touch it to an unpainted metal surface on the outside of the server for at least 2 seconds. This drains static electricity from the package and from your body.
Remove the device from its package and install it directly into the server without setting down the device. If it is necessary to set down the device, put it back into its static-protective package. Do not place the device on the server cover or on a metal surface.
Take additional care when you handle devices during cold weather. Heating reduces indoor humidity and increases static electricity.

See BullSequana Edge Description Guide, 86 A1 65FR to locate the disk.

6.1. Removing a 2.5" disk

Required Tools

Flat screwdriver

Procedure

1. **Unpack the new component on a clean ESD-protected work surface**

2. **Power off the server**

3. **Disconnect the power supply cable**

   Rear view

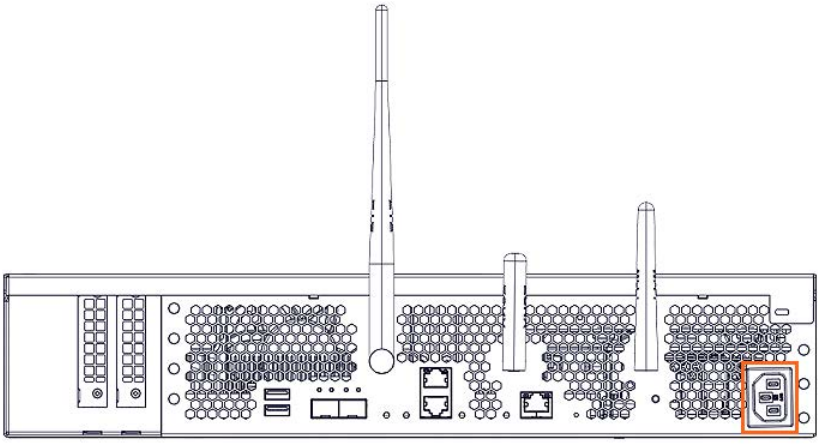

4. **Remove the top aesthetic cover if aesthetic covers are present**

See	Appendix A Servicing the top aesthetic cover

5. Remove the cover

1. Rotate the external antennas to the horizontal position.

Side view

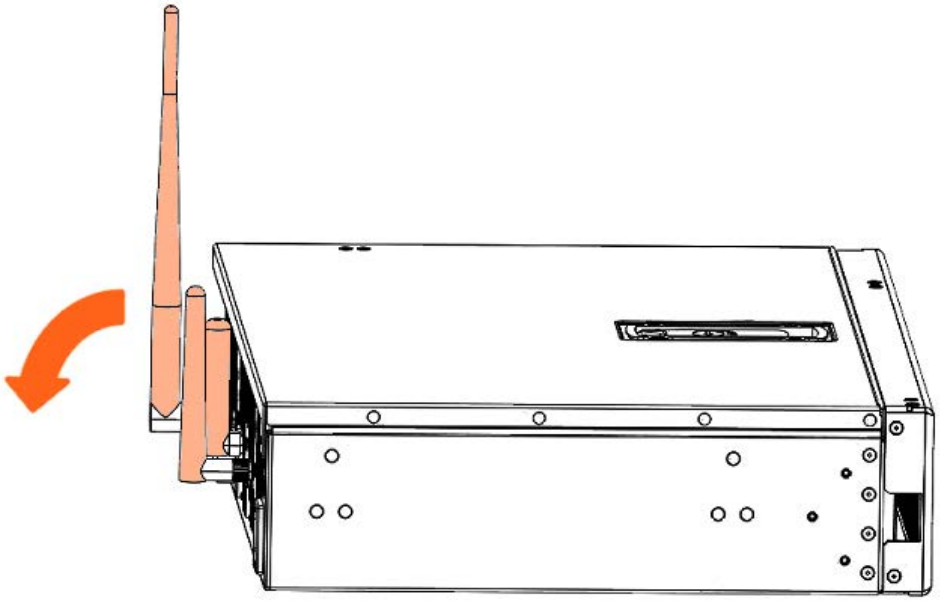

2. Unlock the cover latch.

Front view

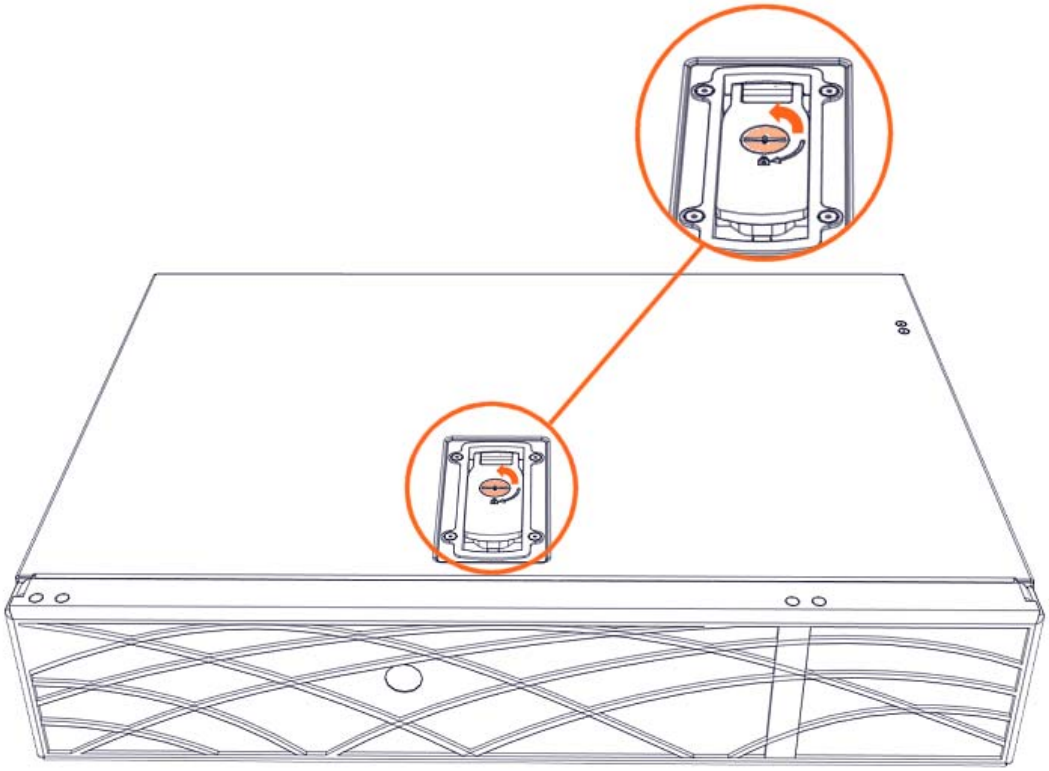

3. Pull the latch up.

Side view

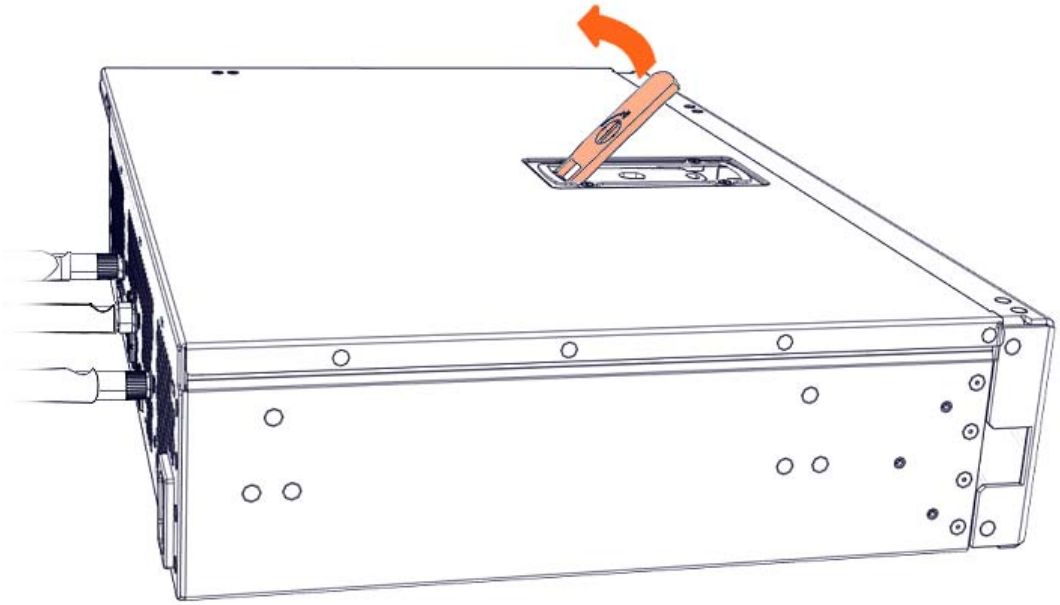

4. Remove the cover.

Front view

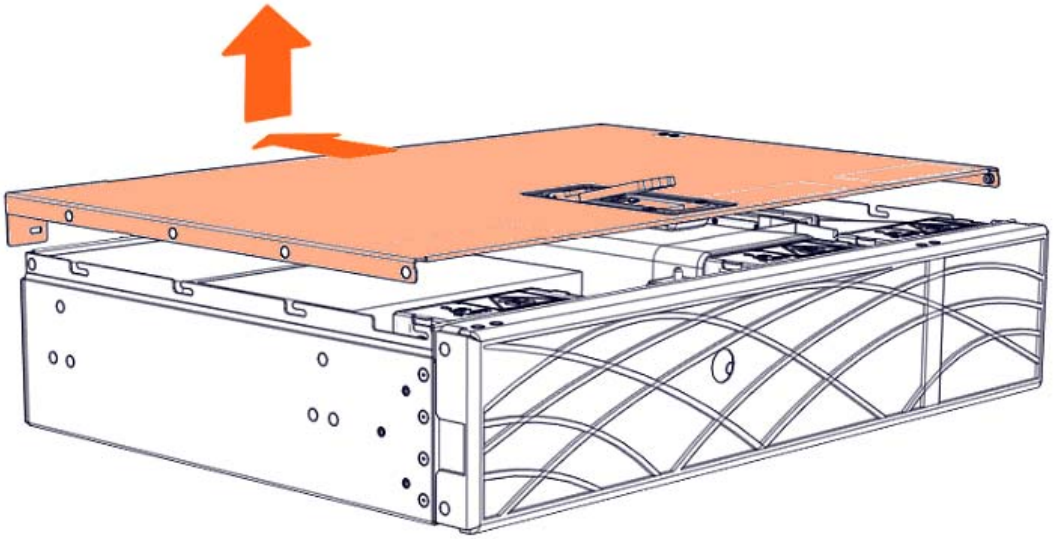

6. Remove the disk cage assembly

1. Disconnect the power and signal cables from the disk.
2. Push in the latches on either side of the disk cage assembly lock.
3. Pull on the lock and disk cage assembly to unlock the assembly.

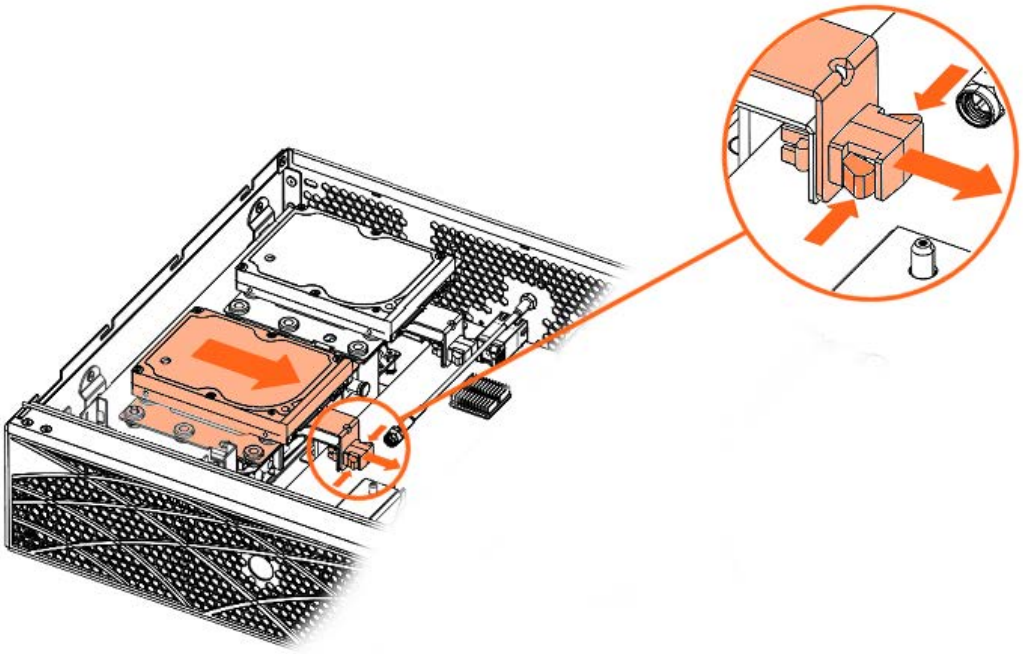

4. Pull the disk cage assembly out.

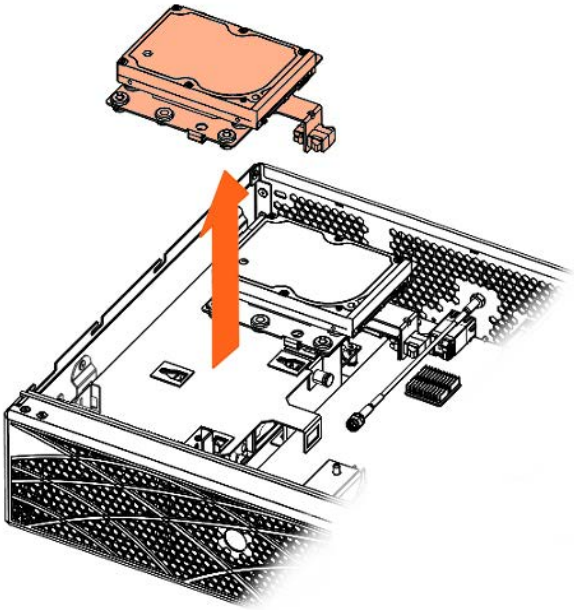

7. Remove the disk

1. Turn the disk cage assembly over.

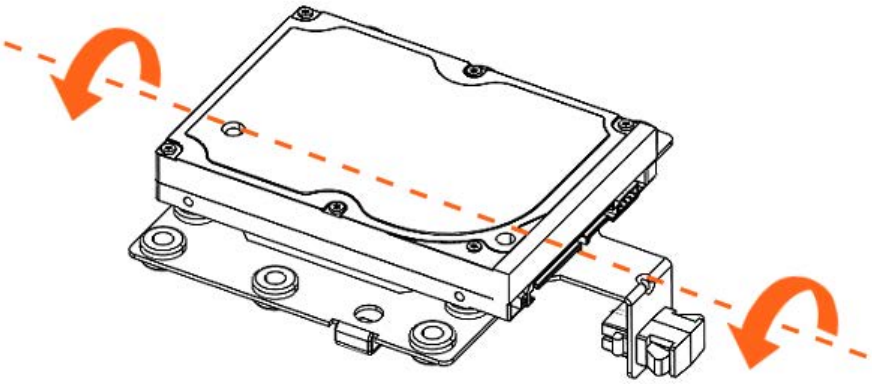

2. Remove the screws.
3. Remove the disk.

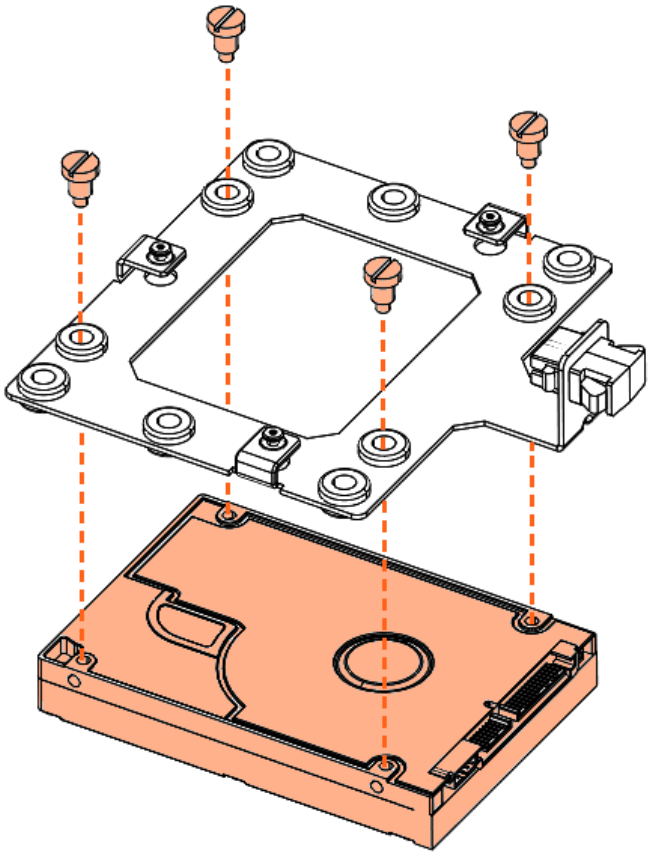

6.2. Installing a 2.5" disk

Required Tools

Flat screwdriver

Procedure

1. **Take hold of the new component**

2. **Install the disk**
   1. Position the disk cage on top of the disk.
   2. Tighten the screws.

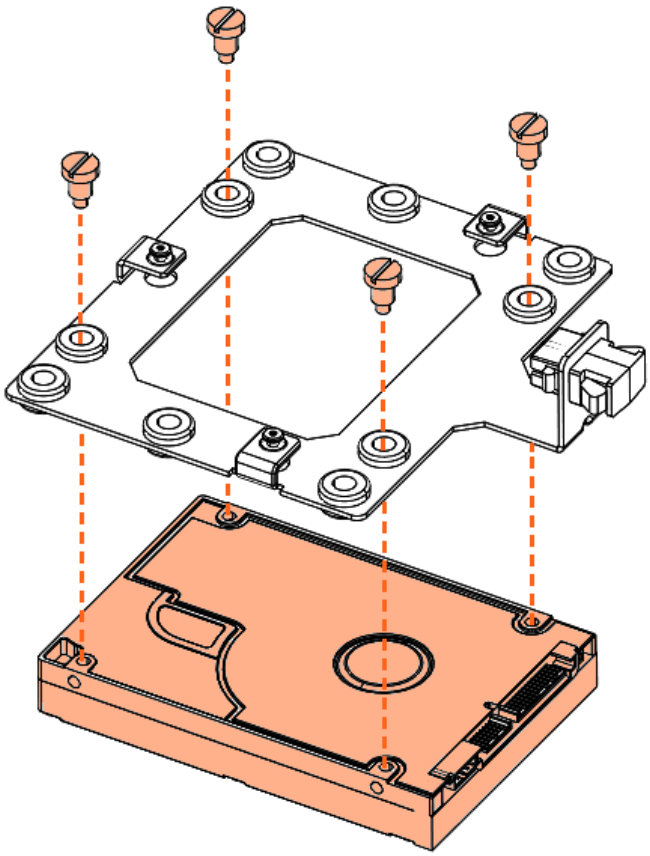

3. Install the disk cage assembly

1. Turn the disk cage assembly over

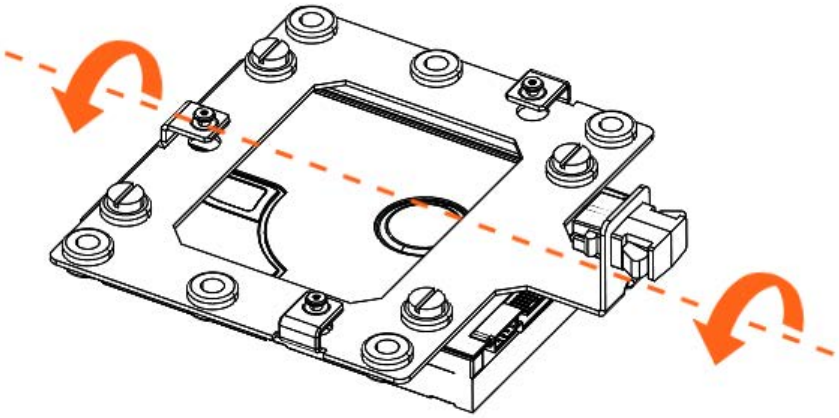

2. Locate the three guide pins

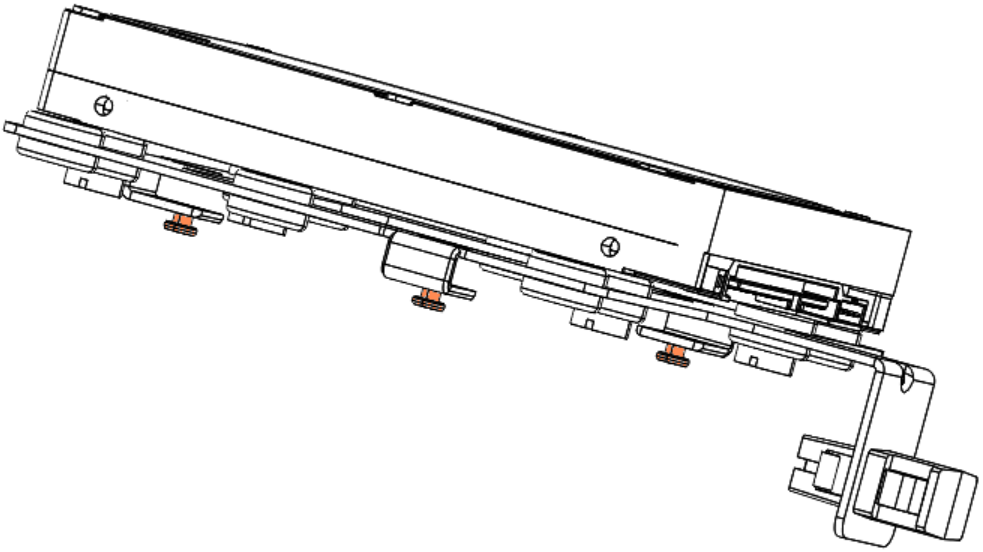

3. Put the disk cage assembly into place

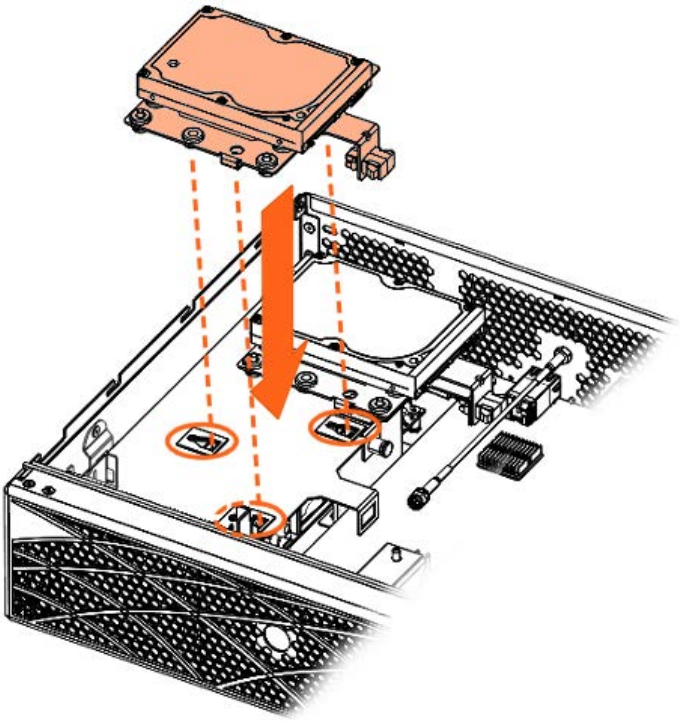

4. Push in the latches on either side of the disk cage assembly lock.
5. Push the lock and disk cage assembly to secure the assembly into place.

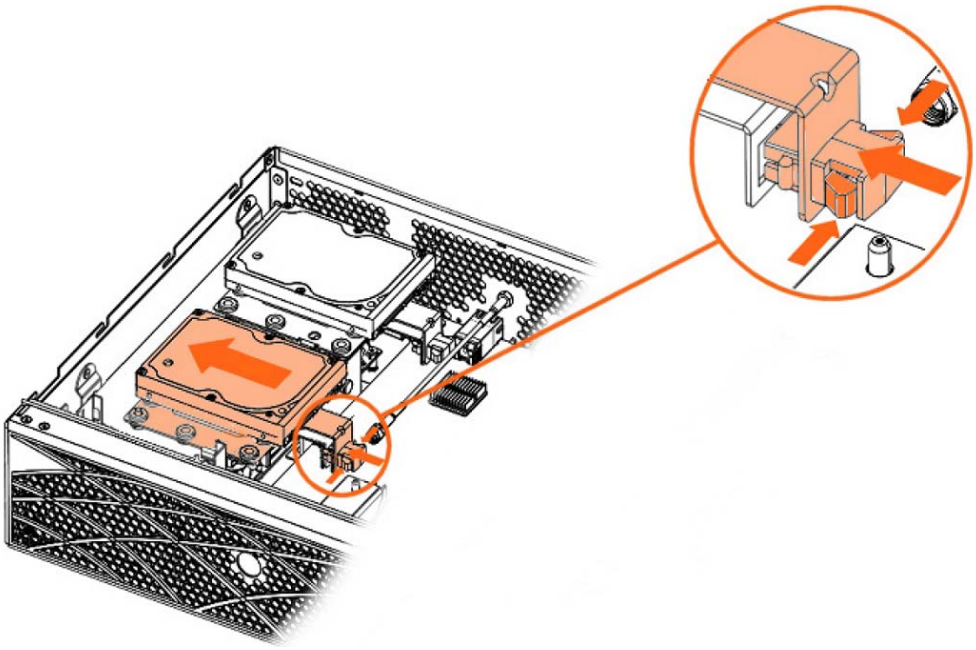

6. Connect the power and signal cables to the disk.

4. Install the cover

1. Put the cover into place.

Front view

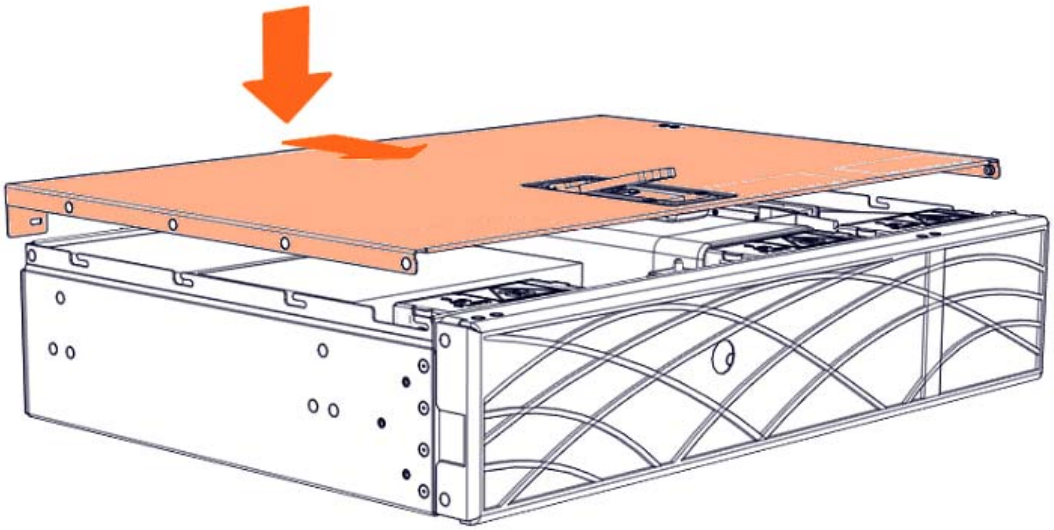

2. Close the latch.

Side view

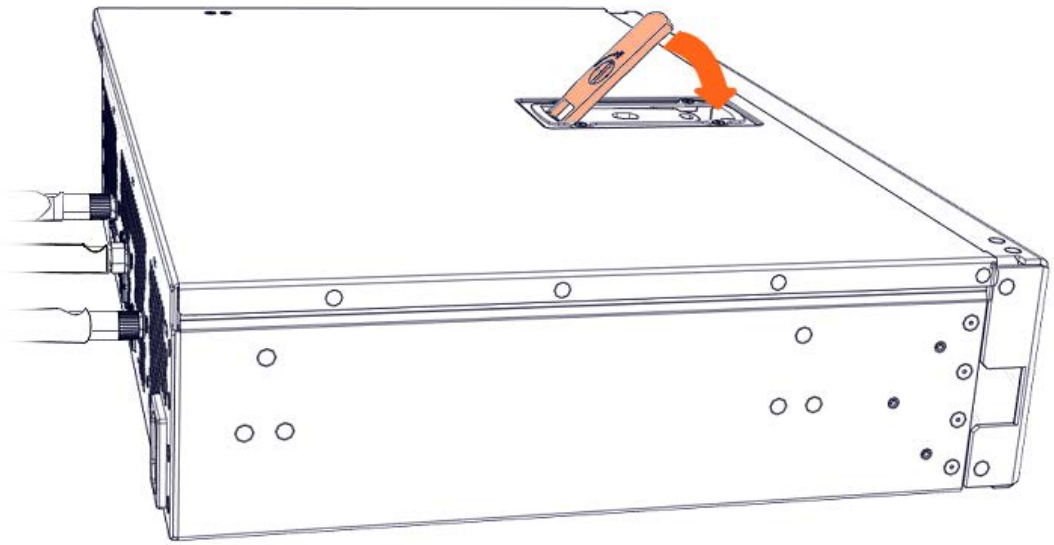

3. Lock the latch to secure the cover in place.

Front view

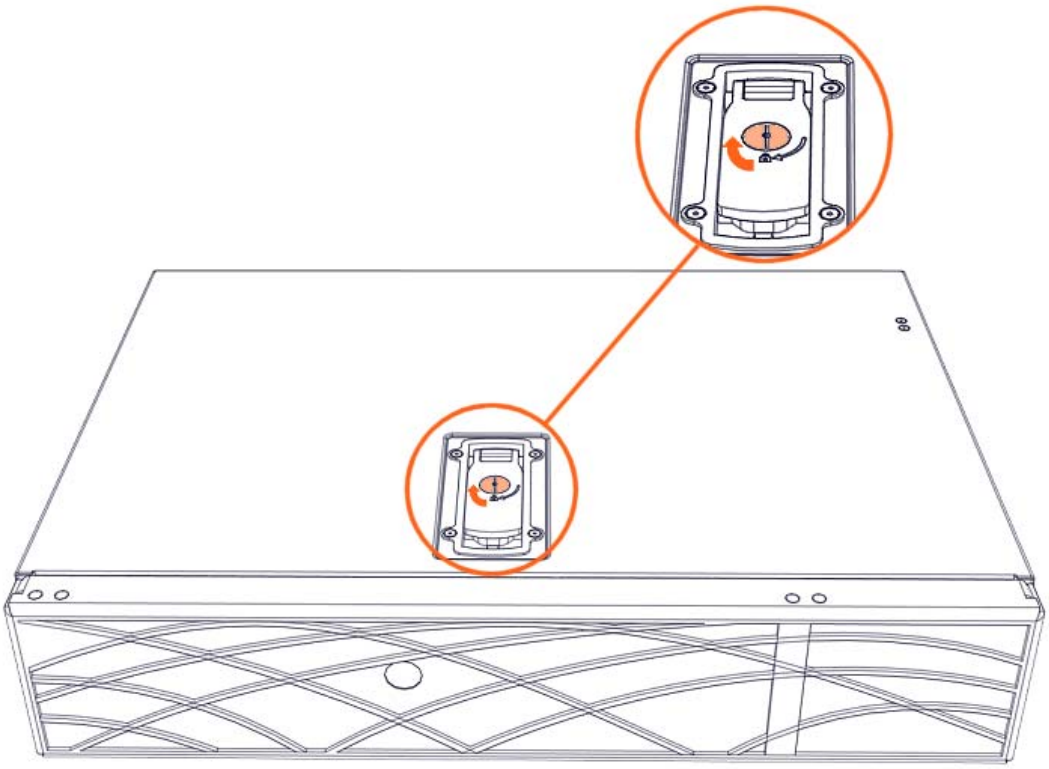

4. Rotate the external antennas to the vertical position.

Side view

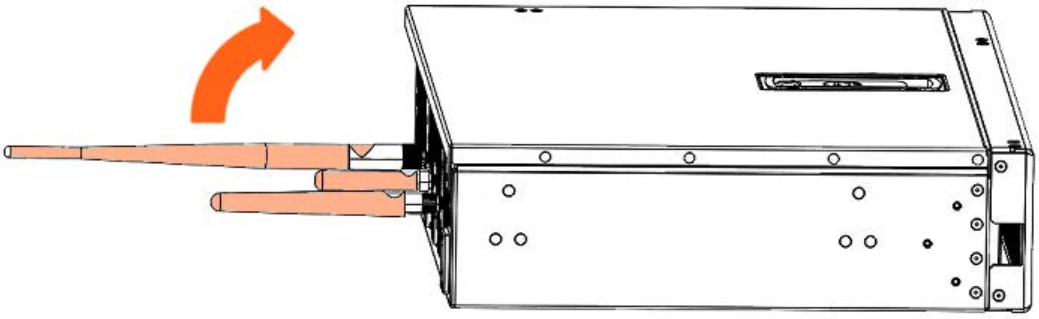

5. Install the top aesthetic cover if aesthetic covers are present

See	Appendix A Servicing the top aesthetic cover

6. **Connect the power supply cable**

Rear view

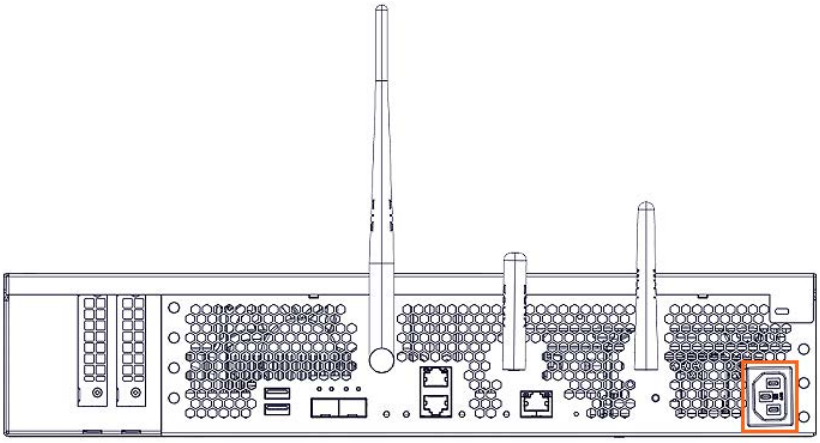

7. **Power on the server**

Chapter 7. Servicing a 3.5” disk

Important **ATTENTION: Please read carefully the safety instructions before you perform the procedures described in this manual.**
Multilingual Safety Notices Guide

C004 **CAUTION**
C004:
Static electricity can damage the server and other electronic devices. To avoid damage, keep static-sensitive devices in their static-protective packages until you are ready to install them.
To reduce the possibility of damage from electrostatic discharge, observe the following precautions:
Limit your movement. Movement can cause static electricity to build up around you.
Wear an electrostatic-discharge wrist strap.
Handle the device carefully, holding it by its edges or its frame.
Do not touch solder joints, pins, or exposed circuitry.
Do not leave the device where others can handle and damage it.
While the device is still in its static-protective package, touch it to an unpainted metal surface on the outside of the server for at least 2 seconds. This drains static electricity from the package and from your body.
Remove the device from its package and install it directly into the server without setting down the device. If it is necessary to set down the device, put it back into its static-protective package. Do not place the device on the server cover or on a metal surface.
Take additional care when you handle devices during cold weather. Heating reduces indoor humidity and increases static electricity.

See BullSequana Edge Description Guide, 86 A1 65FR to locate the disk.

7.1. Removing a 3.5" disk

Required Tools

Phillips screwdriver

Procedure

1. **Unpack the new component on a clean ESD-protected work surface**

2. **Power off the server**

3. **Disconnect the power supply cable**

   Rear view

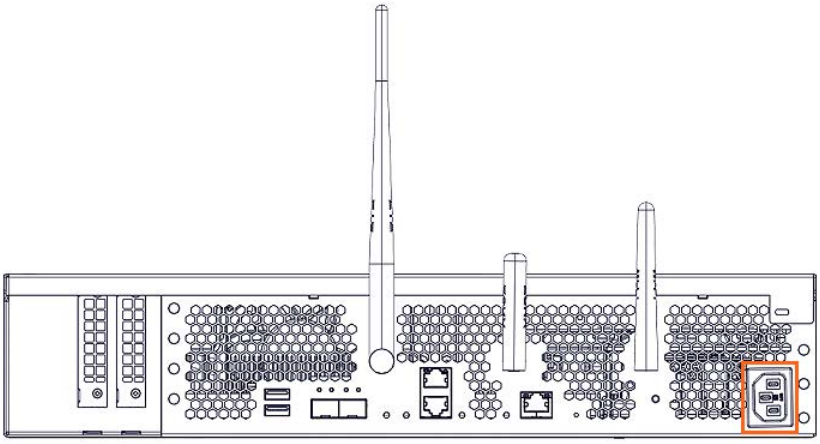

4. **Remove the top aesthetic cover if aesthetic covers are present**

See	Appendix A Servicing the top aesthetic cover

5. Remove the cover

1. Rotate the external antennas to the horizontal position.

Side view

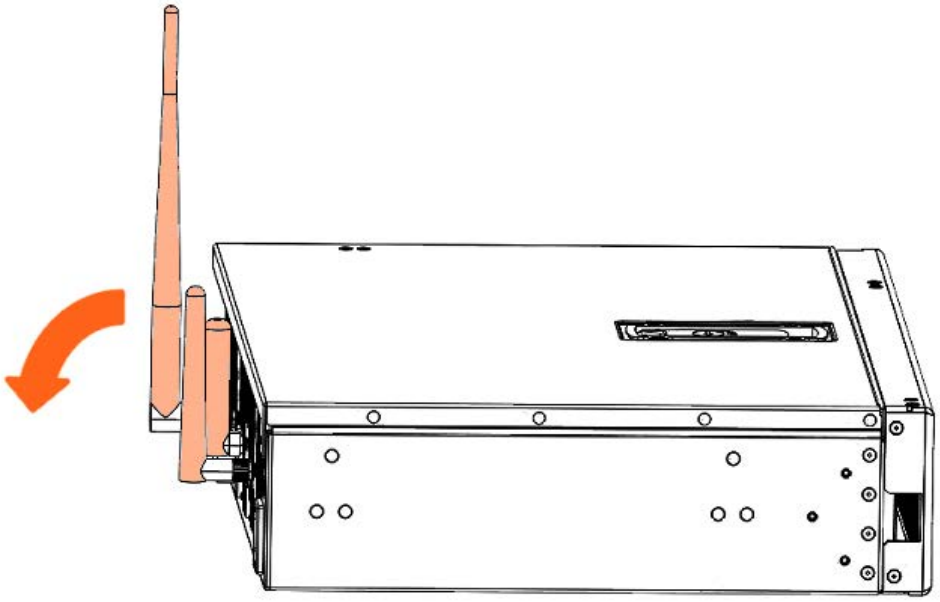

2. Unlock the cover latch.

Front view

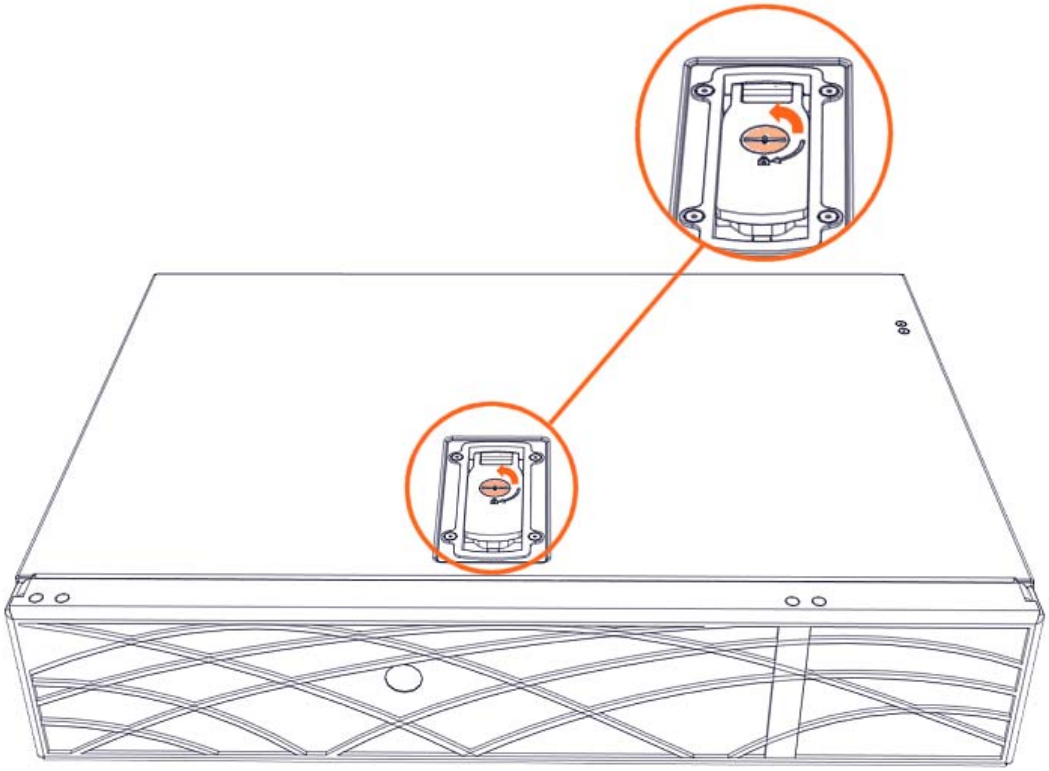

3. Pull the latch up.

Side view

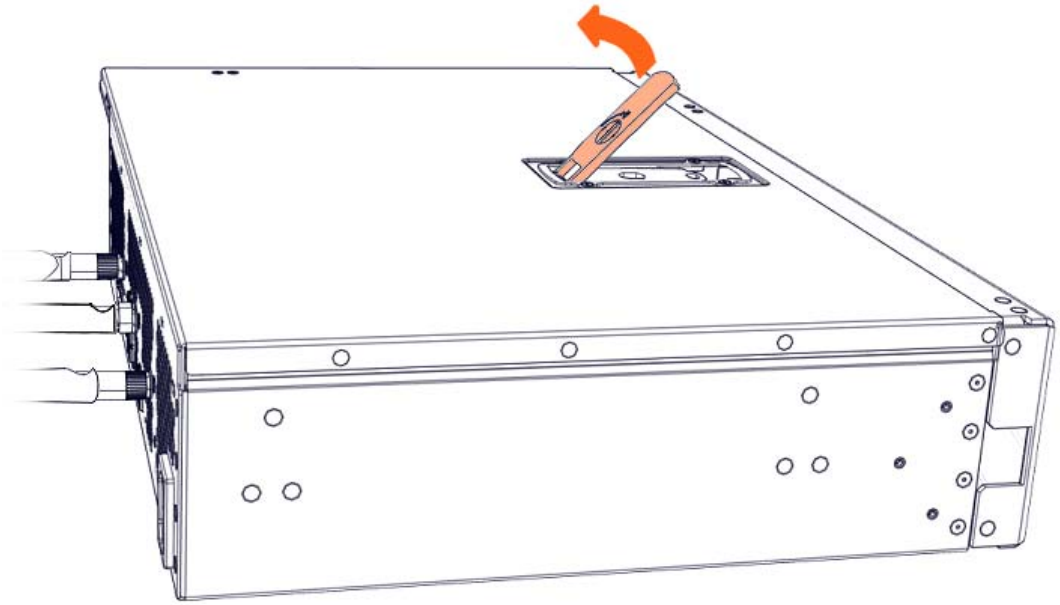

4. Remove the cover.

Front view

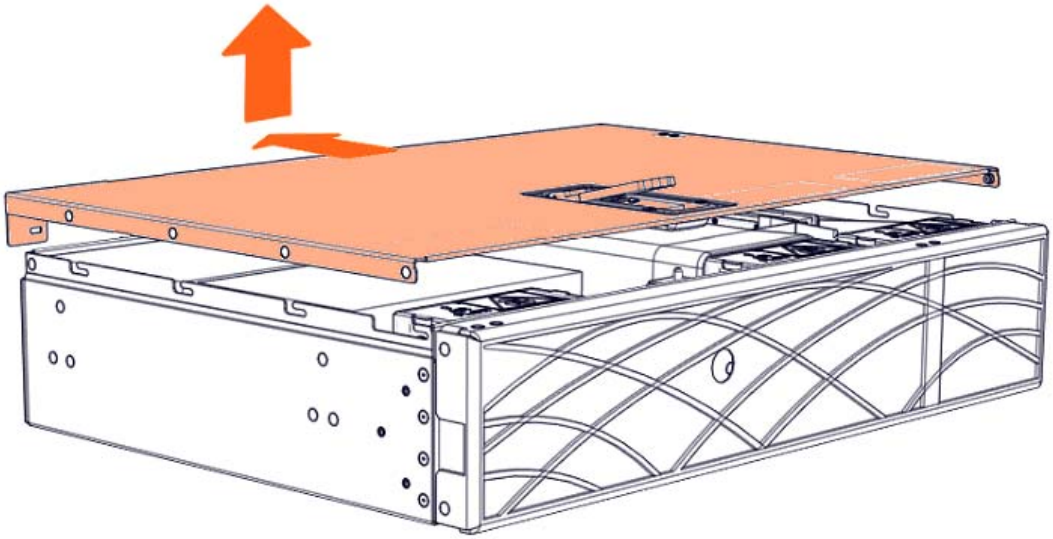

6. Remove the disk cage assembly

1. Disconnect the power and signal cables from the disk.
2. Push in the latches on either side of the disk cage assembly lock.
3. Pull on the lock and disk cage assembly to unlock the assembly.

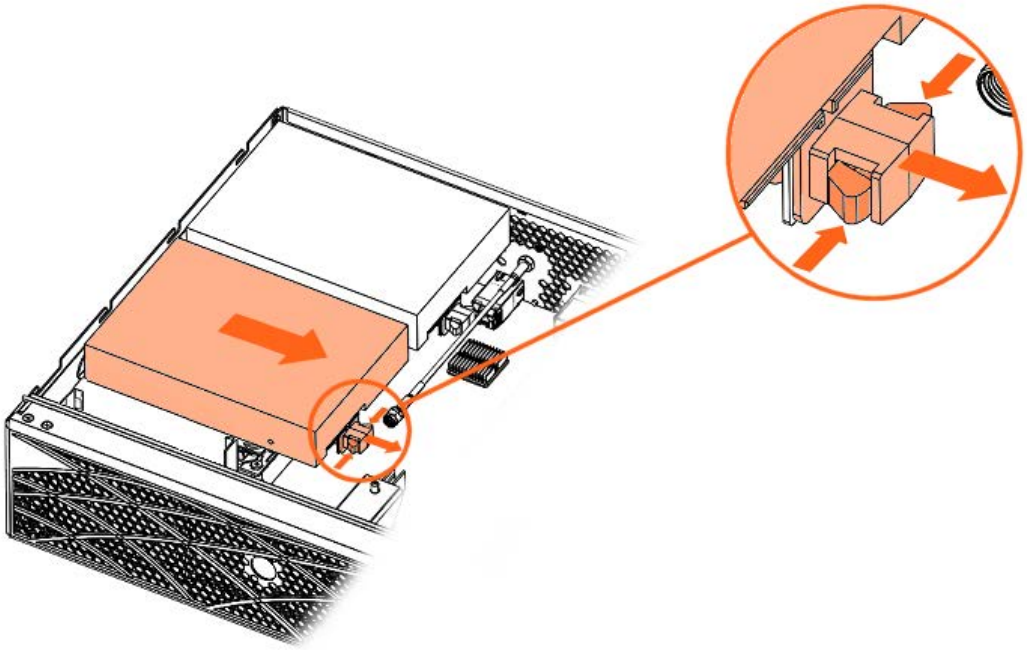

4. Pull the disk cage assembly out.

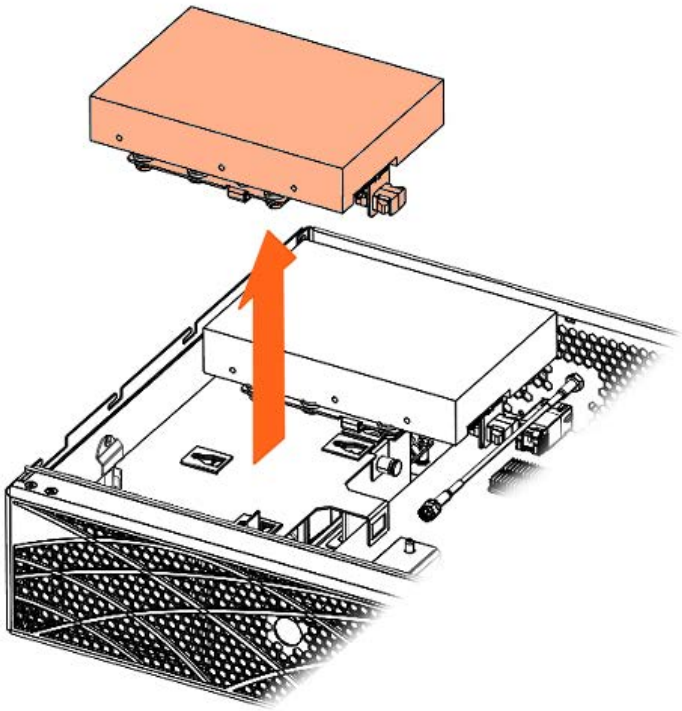

7. Remove the disk

1. Turn the disk cage assembly over.

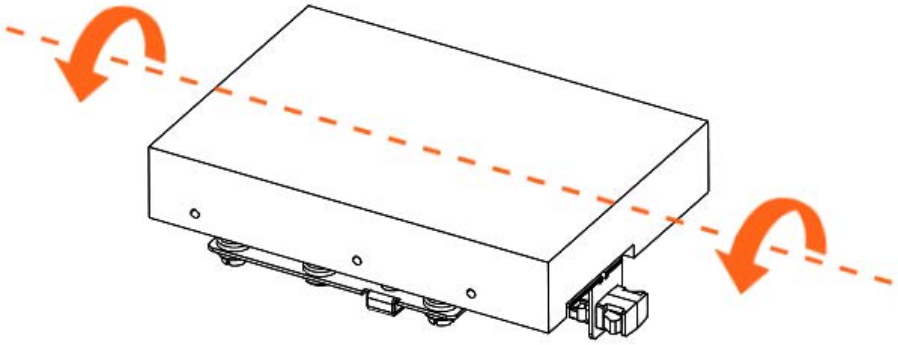

2. Remove the screws.
3. Remove the disk.

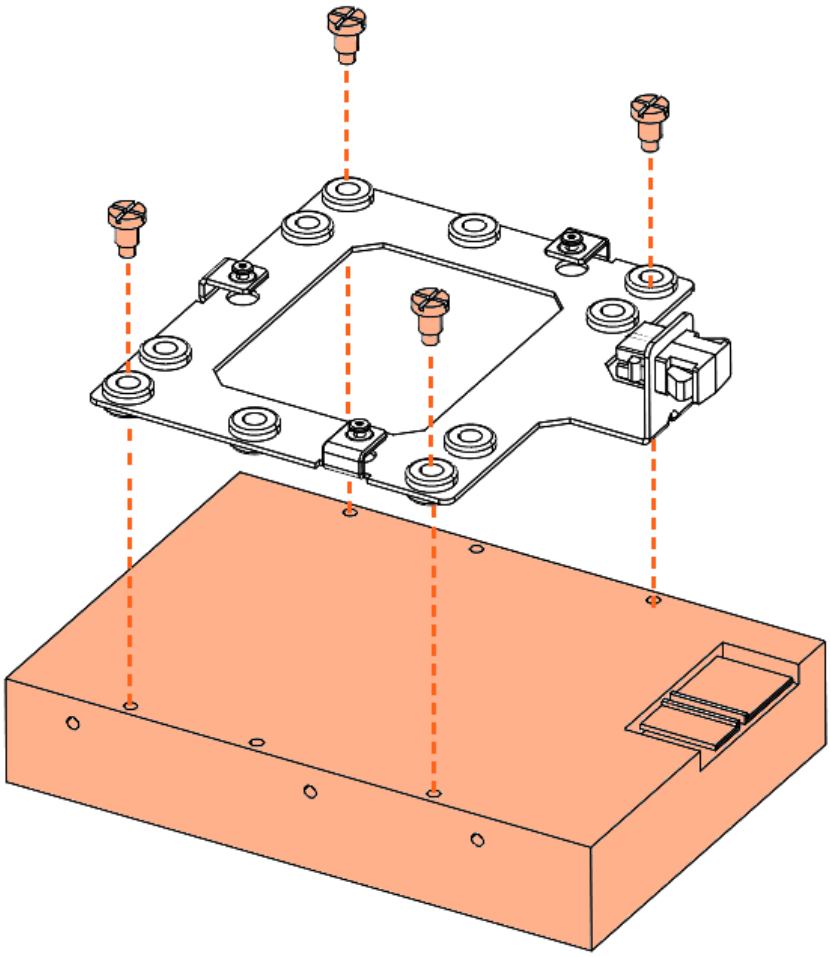

7.2. Installing a 3.5" disk

Required Tools

Phillips screwdriver

Procedure

1. **Take hold of the new component**

2. **Install the disk**
   1. Position the disk cage on top of the disk.
   2. Tighten the screws.

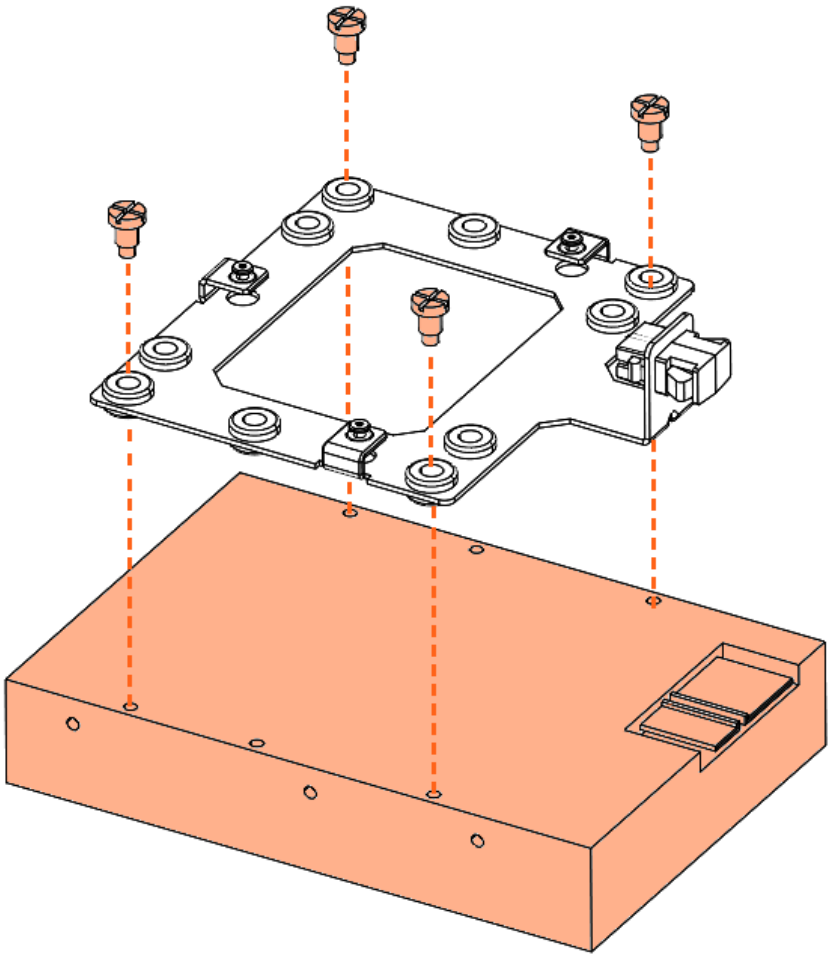

3. Install the disk cage assembly

1. Turn the disk cage assembly over

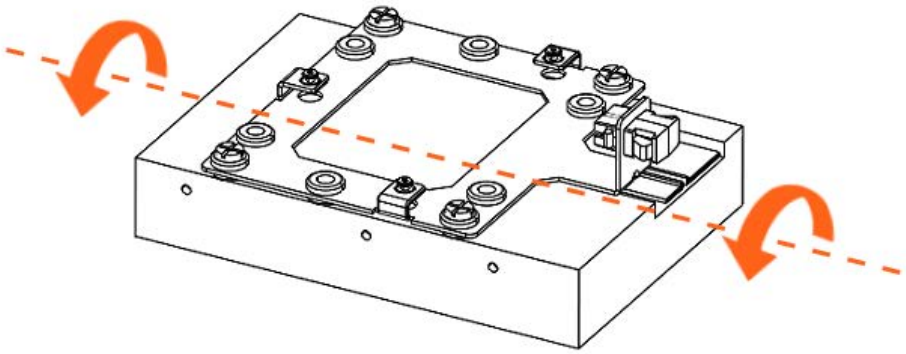

2. Locate the three guide pins

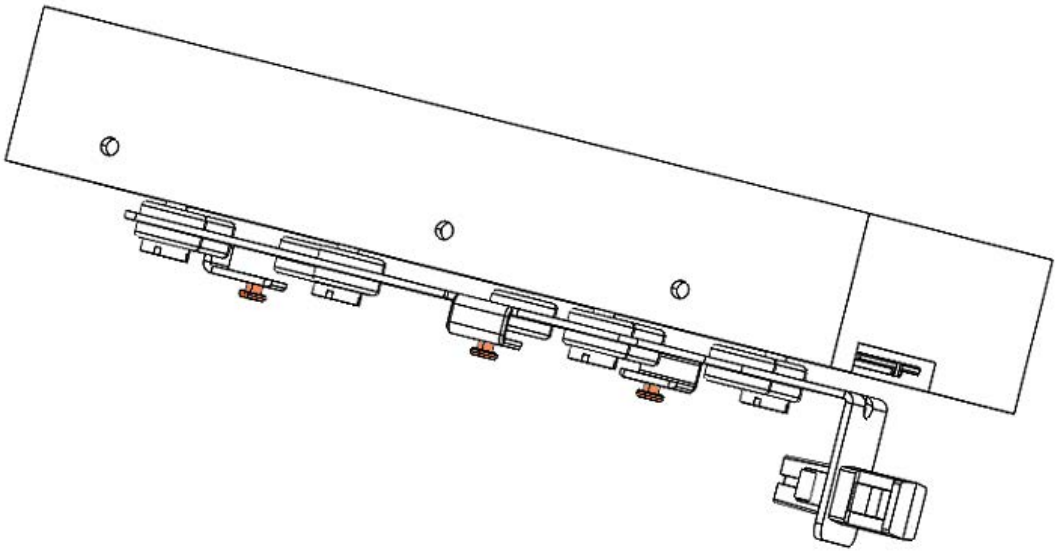

3. Put the disk cage assembly into place

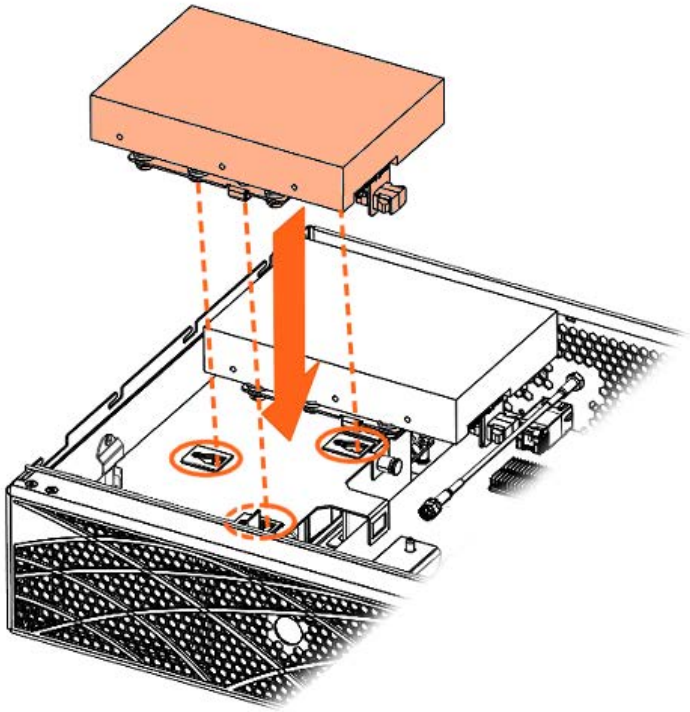

4. Push in the latches on either side of the disk cage assembly lock.
5. Push the lock and disk cage assembly to secure the assembly into place.

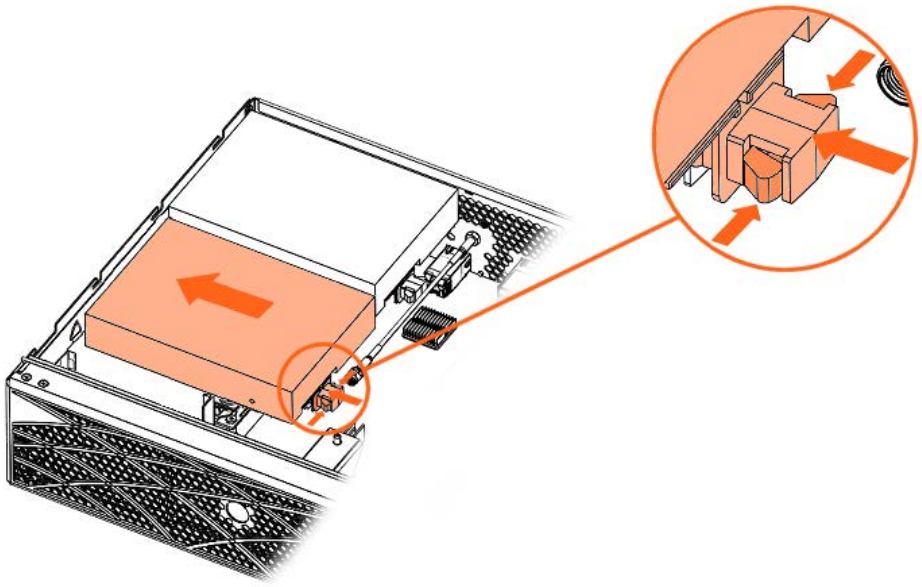

6. Connect the power and signal cables to the disk.

4. Install the cover

1. Put the cover into place.

Front view

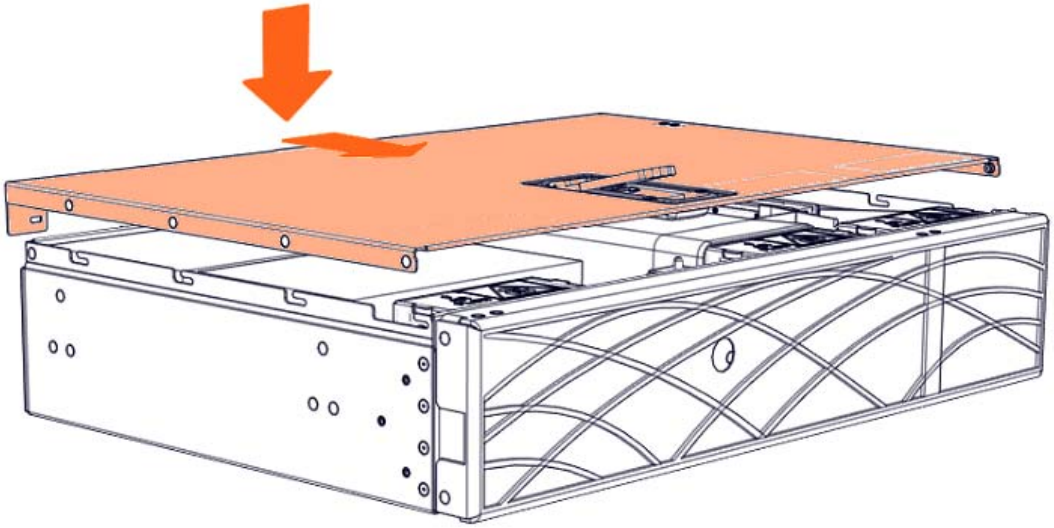

2. Close the latch.

Side view

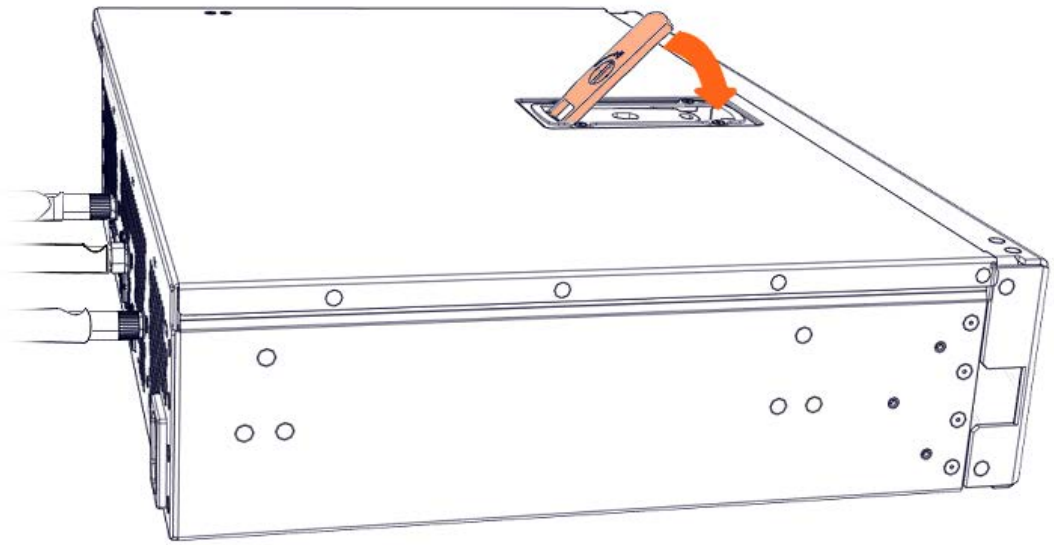

3. Lock the latch to secure the cover in place.

Front view

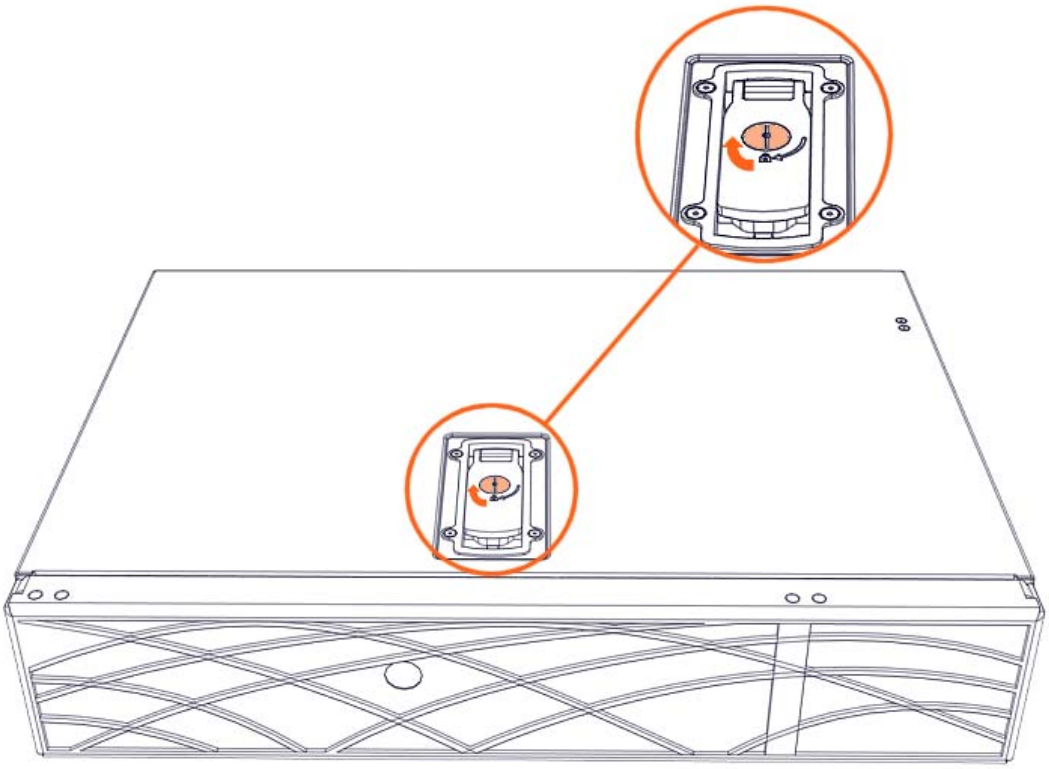

4. Rotate the external antennas to the vertical position.

Side view

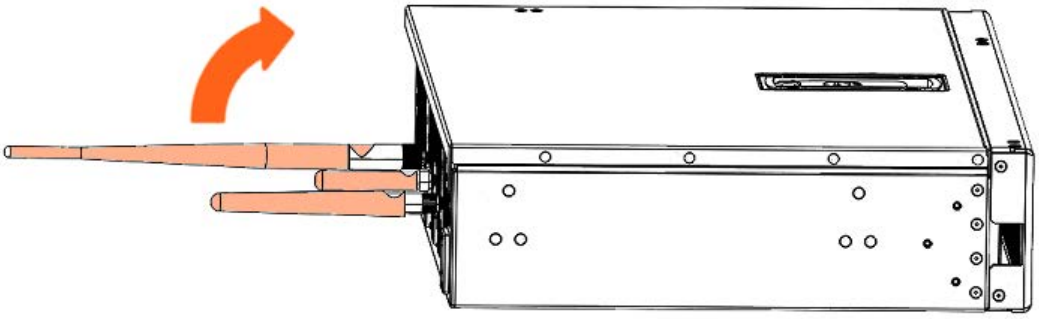

5. Install the top aesthetic cover if aesthetic covers are present

See	Appendix A Servicing the top aesthetic cover

6. **Connect the power supply cable**

Rear view

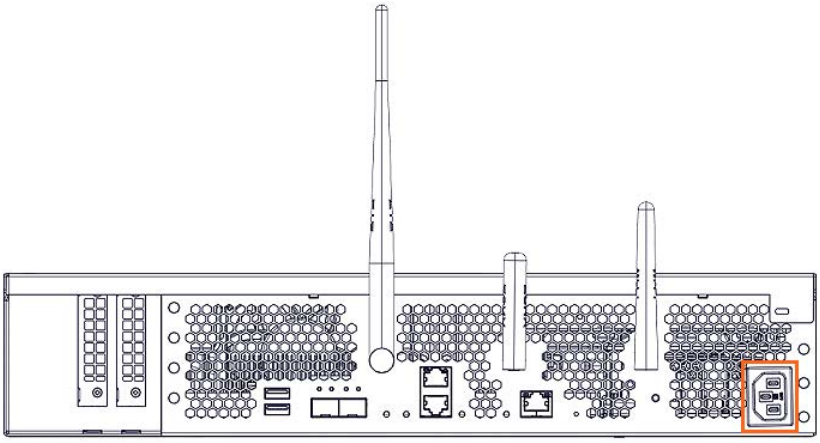

7. **Power on the server**

Chapter 8. Servicing an intrusion detection switch

Important **ATTENTION: Please read carefully the safety instructions before you perform the procedures described in this manual.**
Multilingual Safety Notices Guide

C004 **CAUTION**
C004:
Static electricity can damage the server and other electronic devices. To avoid damage, keep static-sensitive devices in their static-protective packages until you are ready to install them.
To reduce the possibility of damage from electrostatic discharge, observe the following precautions:
Limit your movement. Movement can cause static electricity to build up around you.
Wear an electrostatic-discharge wrist strap.
Handle the device carefully, holding it by its edges or its frame.
Do not touch solder joints, pins, or exposed circuitry.
Do not leave the device where others can handle and damage it.
While the device is still in its static-protective package, touch it to an unpainted metal surface on the outside of the server for at least 2 seconds. This drains static electricity from the package and from your body.
Remove the device from its package and install it directly into the server without setting down the device. If it is necessary to set down the device, put it back into its static-protective package. Do not place the device on the server cover or on a metal surface.
Take additional care when you handle devices during cold weather. Heating reduces indoor humidity and increases static electricity.

See BullSequana Edge Description Guide, 86 A1 65FR to locate the intrusion detection switch.

8.1. Removing an intrusion detection switch

Required Tools

T10 Torx screwdriver

Procedure

1. **Unpack the new component on a clean ESD-protected work surface**

2. **Power off the server**

3. **Disconnect the power supply cable**

   Rear view

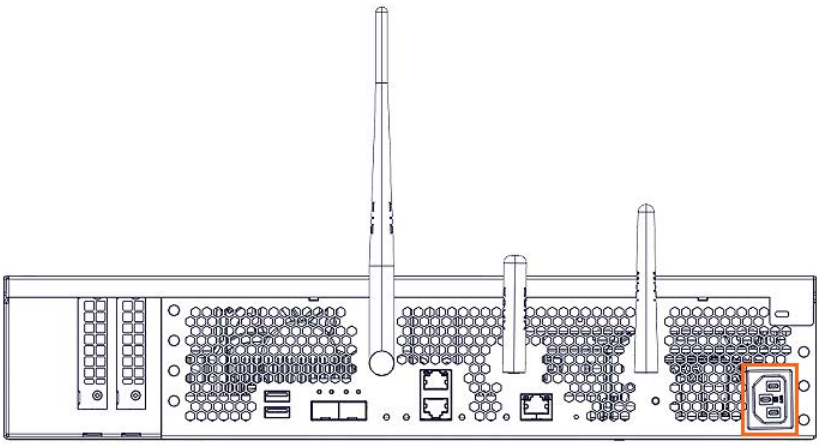

4. **Remove the top aesthetic cover if aesthetic covers are present**

See	Appendix A Servicing the top aesthetic cover

5. Remove the cover

1. Rotate the external antennas to the horizontal position.

Side view

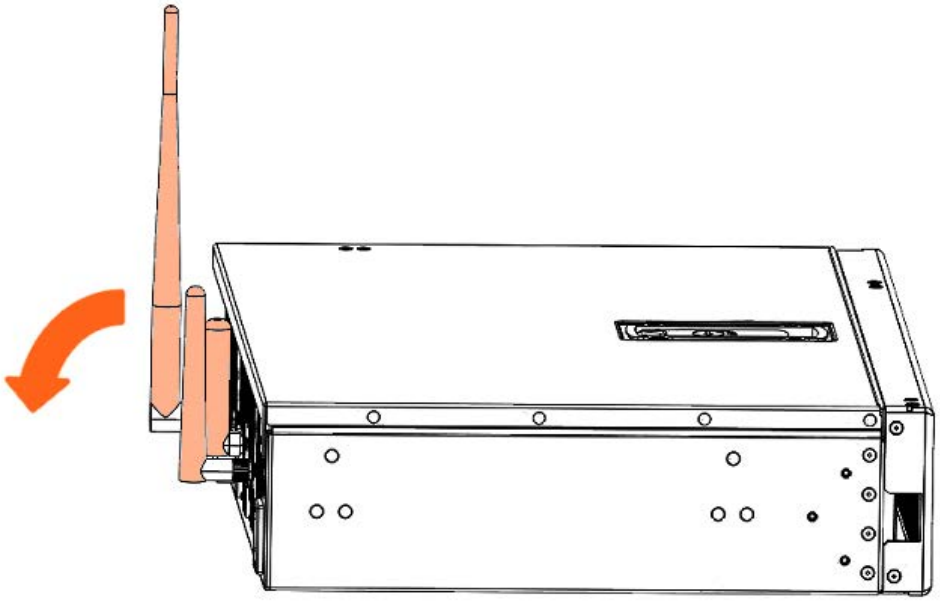

2. Unlock the cover latch.

Front view

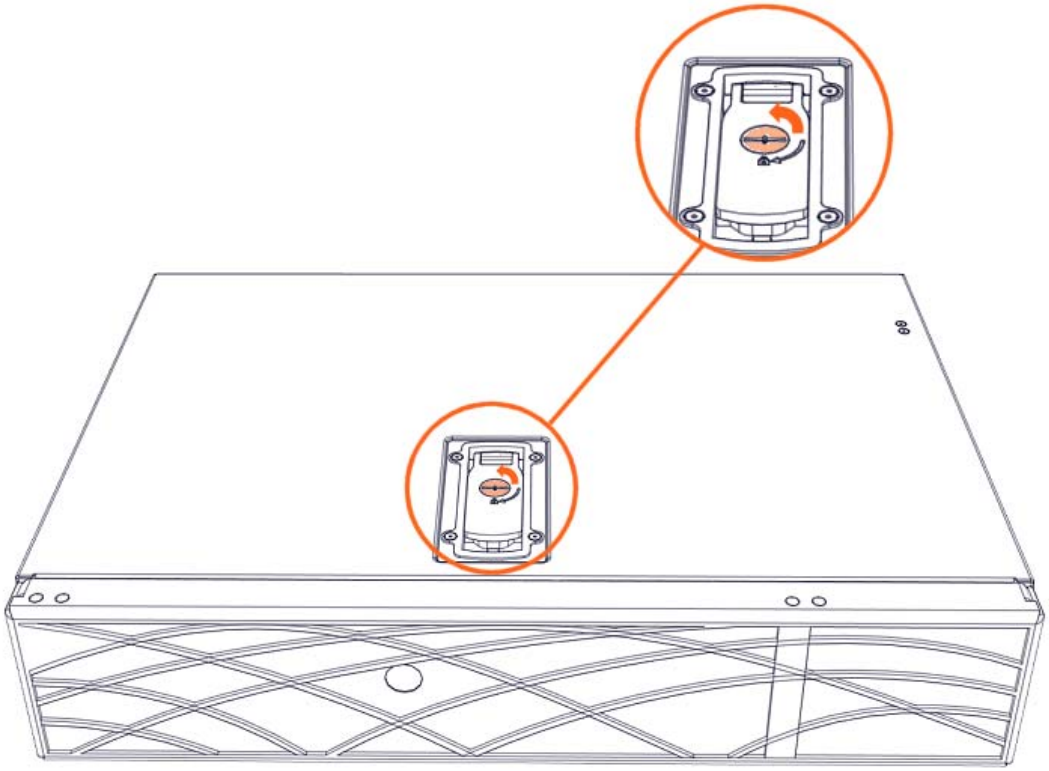

3. Pull the latch up.

Side view

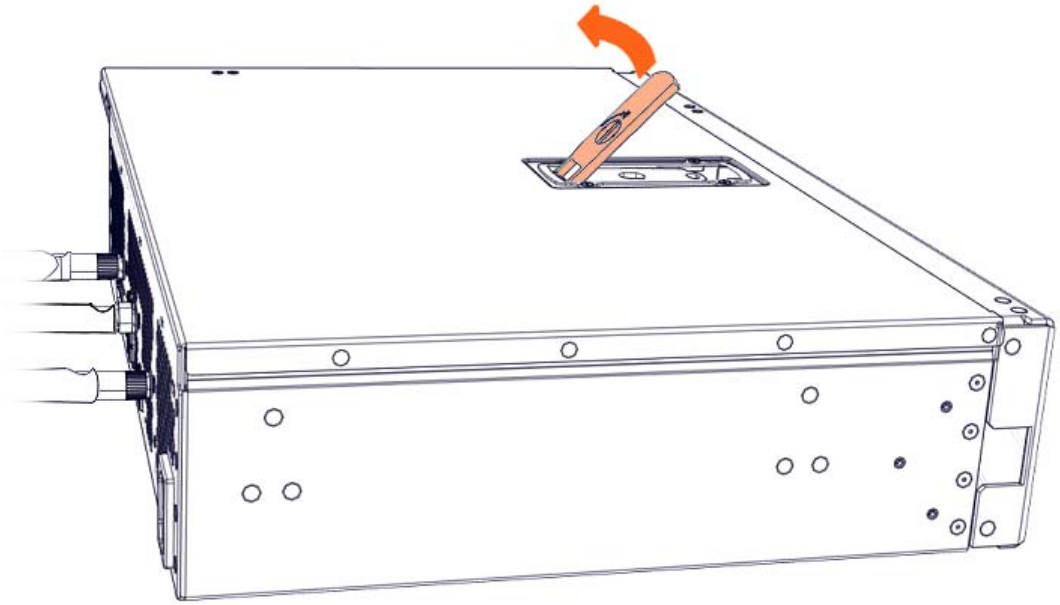

4. Remove the cover.

Front view

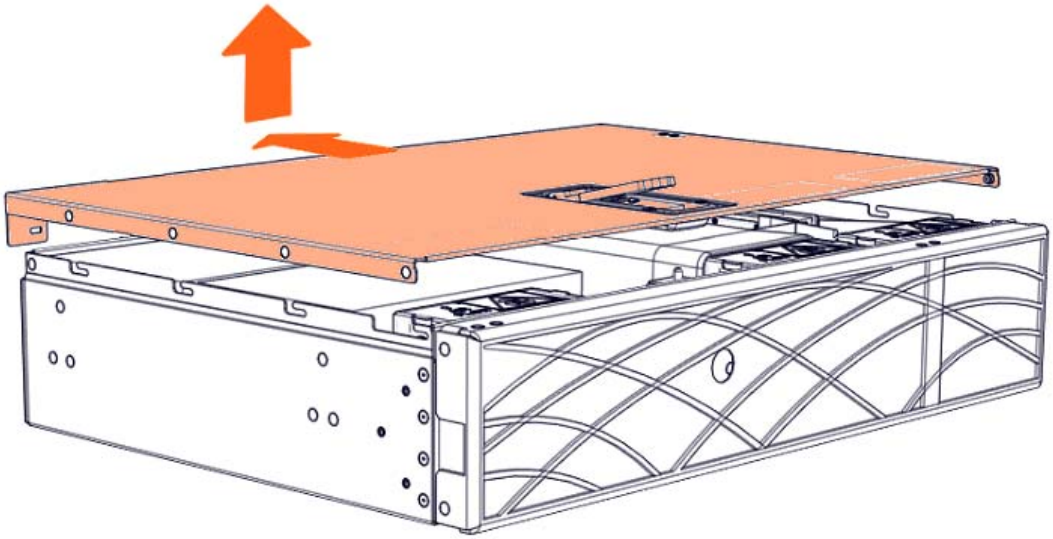

6. **Remove the accelerator air duct if present**

Front view

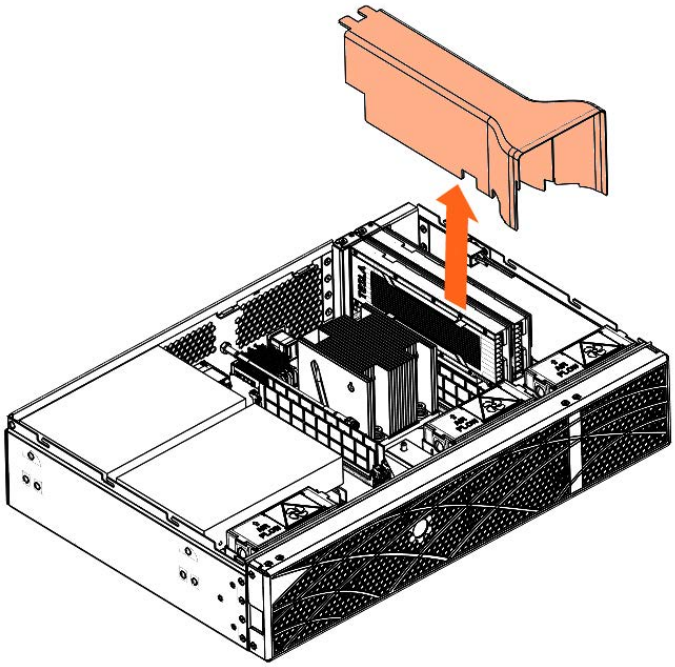

7. Remove the accelerators

For each accelerator, perform the following steps:

1. Remove the screw.
2. Pull the accelerator out.

Front view

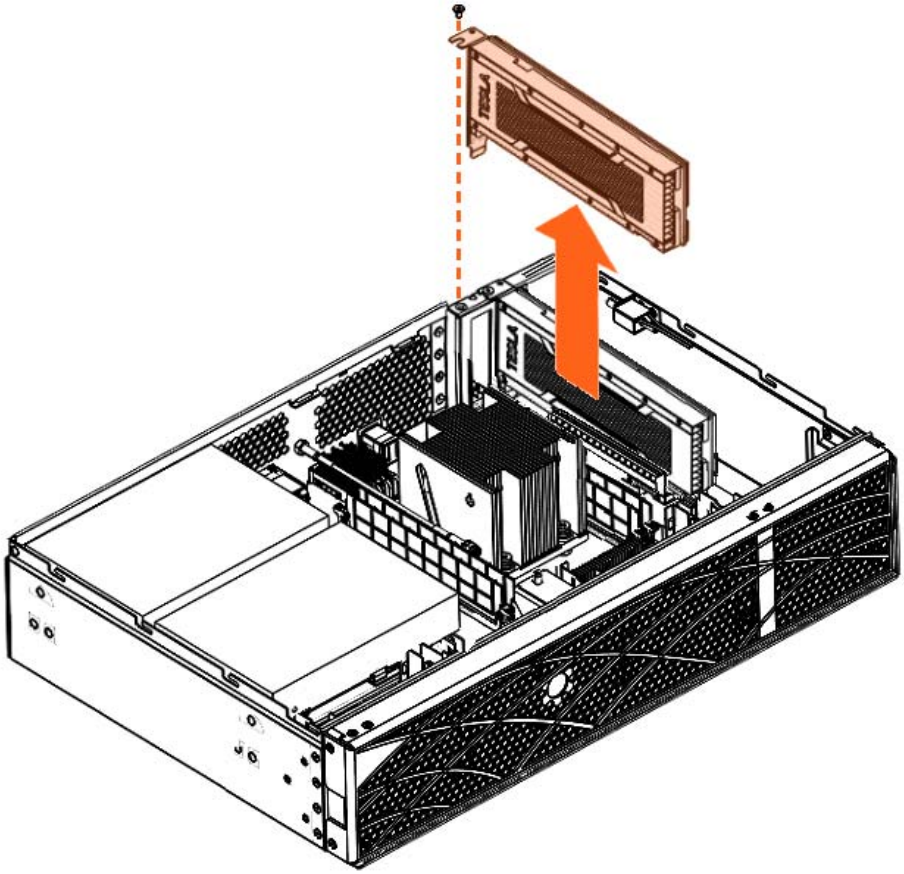

8. Remove the intrusion detection switch and cable

1. Disconnect the intrusion detection switch cable from the motherboard.
2. Unclip the intrusion detection switch from the bracket and move out and up.

Rear view

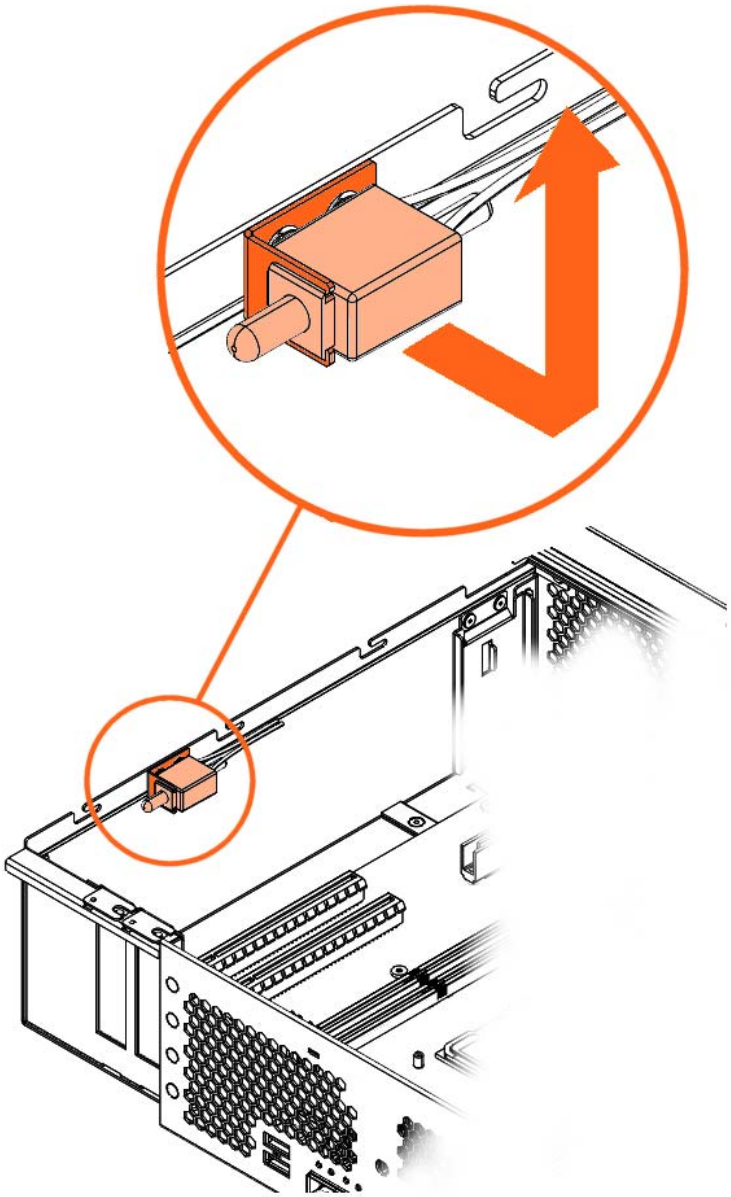

8.2. Installing an intrusion detection switch

Required Tools

T10 Torx screwdriver

Procedure

1. **Take hold of the new component**

2. **Install the intrusion detection switch and cable**

   1. Move the intrusion detection switch down to the bracket

   Rear view

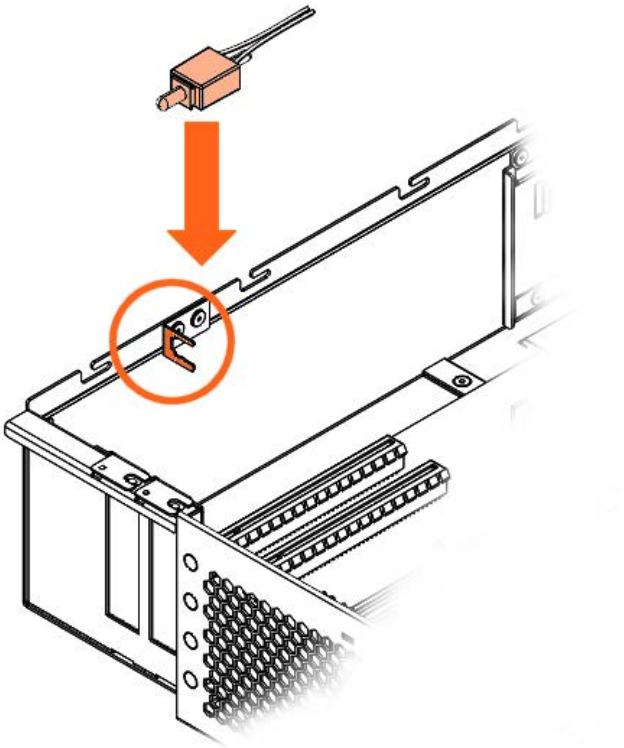

2. Clip the intrusion detection switch into the bracket.

Rear view

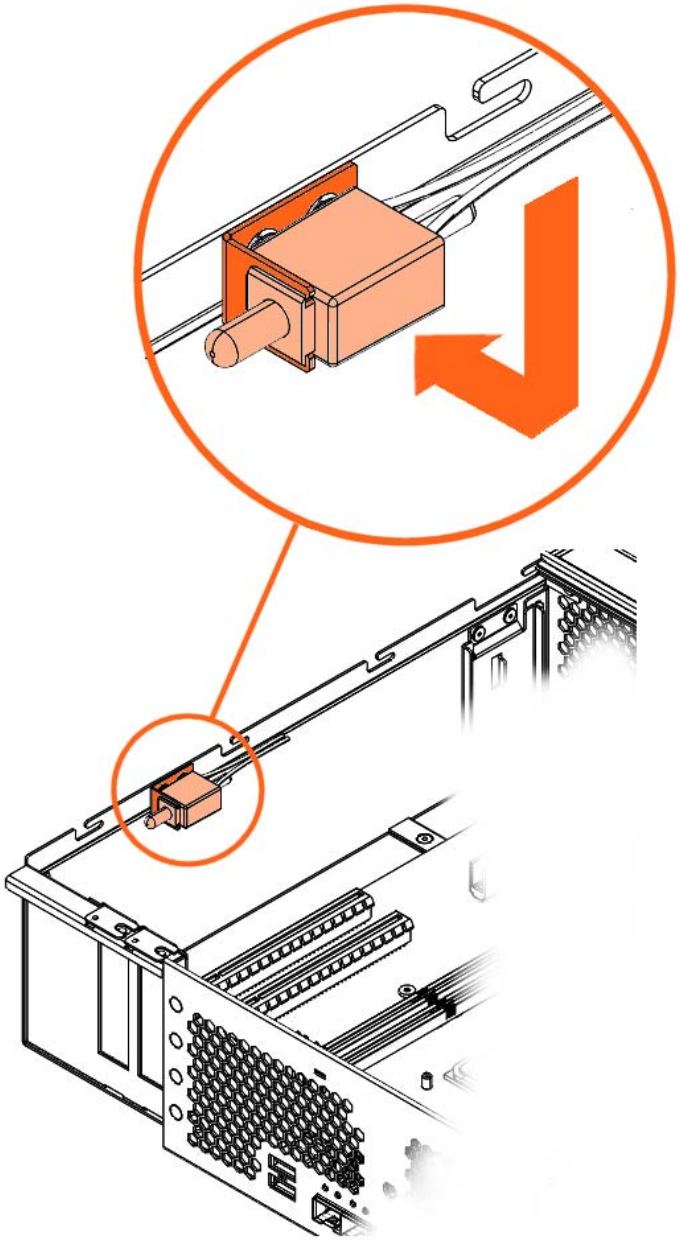

3. Connect the intrusion detection switch cable to the motherboard.

3. Install the accelerators

For each accelerator, perform the following steps:

1. Position the accelerator.
2. Tighten the screw.

Top view

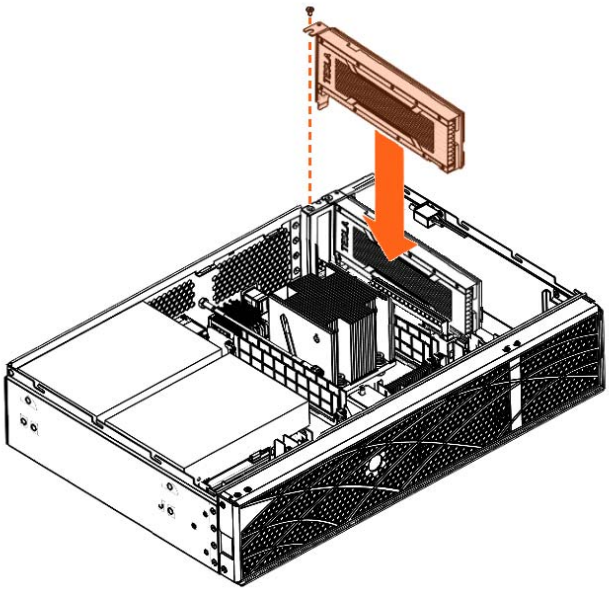

4. Install the accelerator air duct if present

Front view

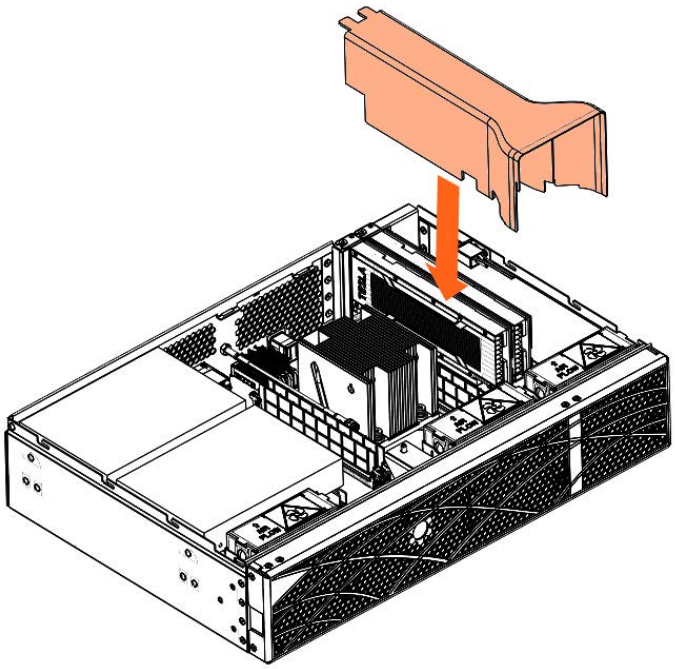

5. Install the cover

1. Put the cover into place.

Front view

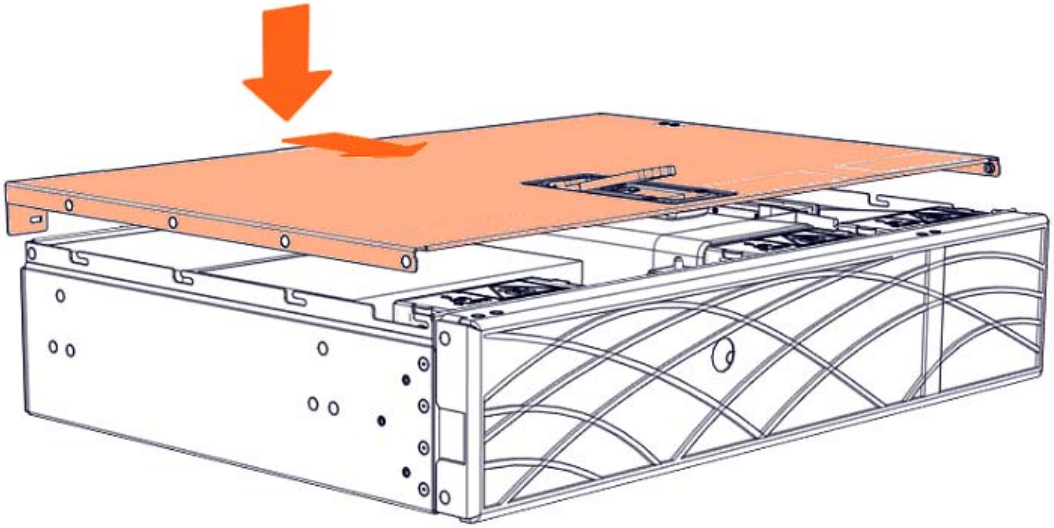

2. Close the latch.

Side view

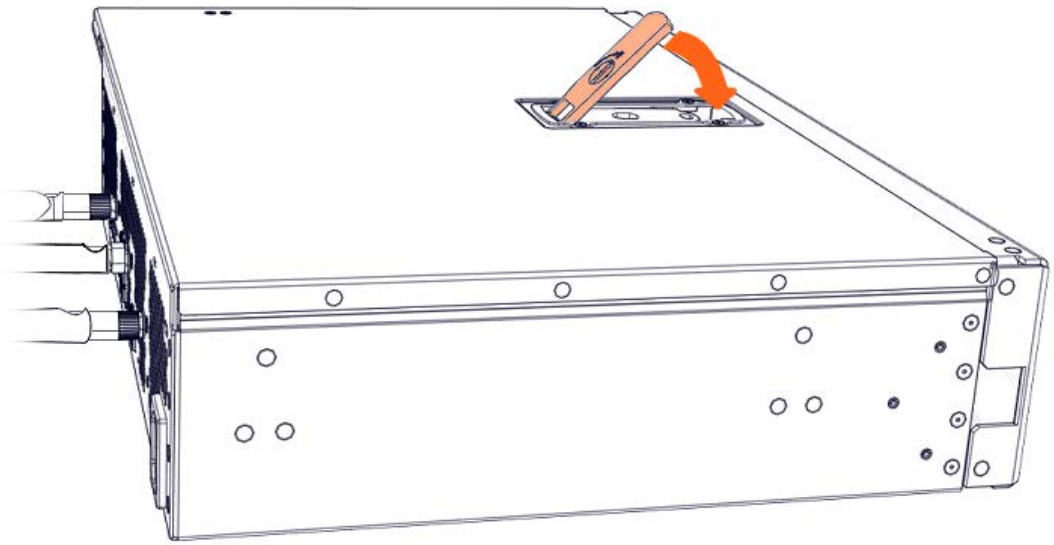

3. Lock the latch to secure the cover in place.

Front view

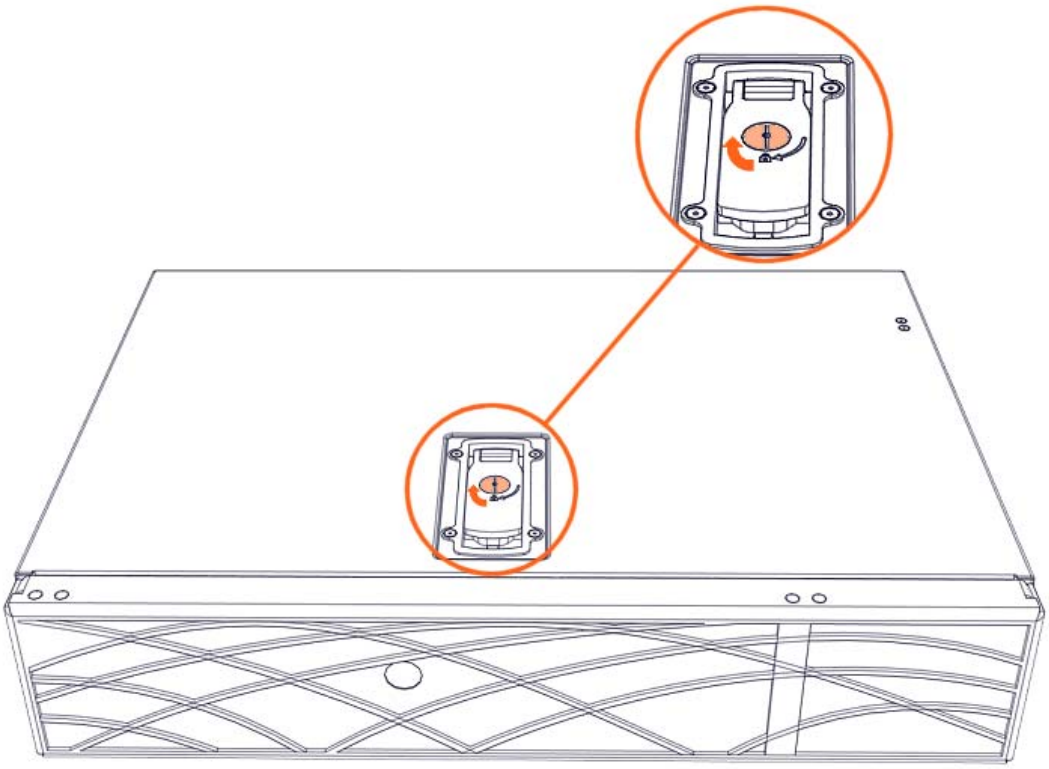

4. Rotate the external antennas to the vertical position.

Side view

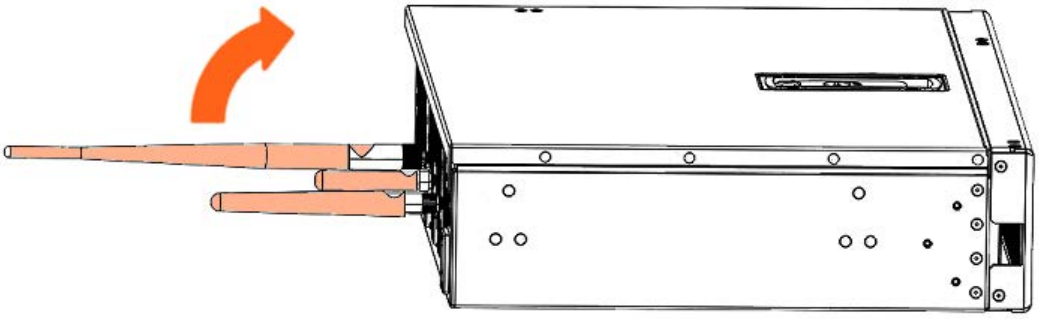

6. Install the top aesthetic cover if aesthetic covers are present

See	Appendix A Servicing the top aesthetic cover

7. Connect the power supply cable

Rear view

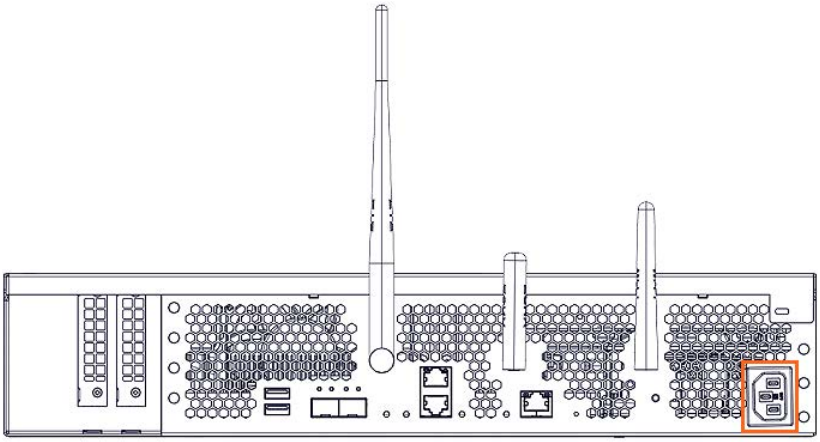

8. Power on the server

Chapter 9. Other maintenance tasks

9.1. Resetting the Baseboard Management Controller (BMC)

Important **ATTENTION: Please read carefully the safety instructions before you perform the procedures described in this manual.**
Multilingual Safety Notices Guide

C004 **CAUTION**
C004:
Static electricity can damage the server and other electronic devices. To avoid damage, keep static-sensitive devices in their static-protective packages until you are ready to install them.
To reduce the possibility of damage from electrostatic discharge, observe the following precautions:
Limit your movement. Movement can cause static electricity to build up around you.
Wear an electrostatic-discharge wrist strap.
Handle the device carefully, holding it by its edges or its frame.
Do not touch solder joints, pins, or exposed circuitry.
Do not leave the device where others can handle and damage it.
While the device is still in its static-protective package, touch it to an unpainted metal surface on the outside of the server for at least 2 seconds. This drains static electricity from the package and from your body.
Remove the device from its package and install it directly into the server without setting down the device. If it is necessary to set down the device, put it back into its static-protective package. Do not place the device on the server cover or on a metal surface.
Take additional care when you handle devices during cold weather. Heating reduces indoor humidity and increases static electricity.

9.1.1. Restarting the BMC

The following procedures explain how to perform a simple reset of the BMC.

9.1.1.1. Restarting with the Server Hardware Console (SHC)

See SHC Reference Guide for more information.

Prerequisites

- A laptop computer with the Chrome or Firefox browser installed
- A laptop is connected to the BullSequana Edge BMC port
- The server BMC has an IP address allocated

Procedure

1. Connect to the SHC.
2. From the **Control** tab, click **Reboot BMC**. The **Reboot BMC** page opens.

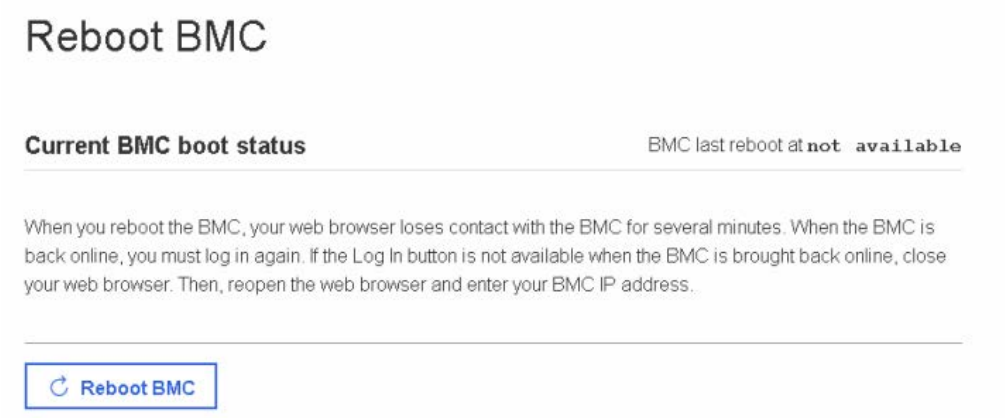

3. Click the **Reboot BMC** button.

Note When the BMC is rebooted the browser loses contact with the BMC for several minutes. The log in procedure must be performed when the BMC is back online. If the log in button is not available, close the browser, reopen it and enter the BMC IP address.

4. Stop the SHC.

   Click the **Logout** button.

9.1.1.2. Restarting with the Machine Intelligence System Management (MISM) console

See Management Console User's Guide for more information.

Prerequisites

- The laptop is connected to the server BMC port
- The server BMC has an IP address allocated
- The server is in standby power mode
- The MISM console is launched

Procedure

1. Launch the **Reboot bmc** job.
2. Check that the job status is **Successful**.

   If the job status is **Failed**, check the output of the job in the text window.
3. Launch the **Check BMC alive** job.
4. Check that the job status is **Successful**.

   If the job status is **Failed**, check the output of the job in the text window.

9.1.2. Resetting the BMC to default factory settings

The following procedures explain how to reset the BMC to its default factory settings.

Consequences of the reset

Resetting the BMC to default factory settings results in the loss of all customized parameters. This includes the following:

- Loss of the network configuration including both connection IP addresses (with gateway)
- Deletion of all BMC user accounts except the admin default account
- Reset of the password of the admin default account to its default value
- Loss of IPV4 custom route configuration
- Reset of the name of the server to its default value
- Reset of the time and date and loss of the time servers
- Loss of the rsyslog configuration
- Deletion of all events
- Deletion of all BMC logs and dumps previously collected

9.1.2.1. Resetting with the command line

Prerequisites

- The server BMC has an IP address allocated
- A laptop connected to the BullSequana Edge server

Procedure

1. Connect to the server via **SSH**.
2. Export the BMC credentials:

```
export bmc=<user>:<pwd>@<BMC IP>
```

Note Any BMC user account with administrator rights may be used.

3. Reset the BMC to the default factory settings:

```
curl -b cjar -k -H 'Content-Type: application/json' -X POST -d '{"data":[]}'
https://${bmc}/xyz/openbmc_project/software/action/Reset
```

Note After the BMC reset to the factory settings, only the admin default user account with its default password can be used to connect to the BMC.

4. Connect to the SHC

5. From the **Control** tab, click **Reboot BMC**. The **Reboot BMC** page opens.

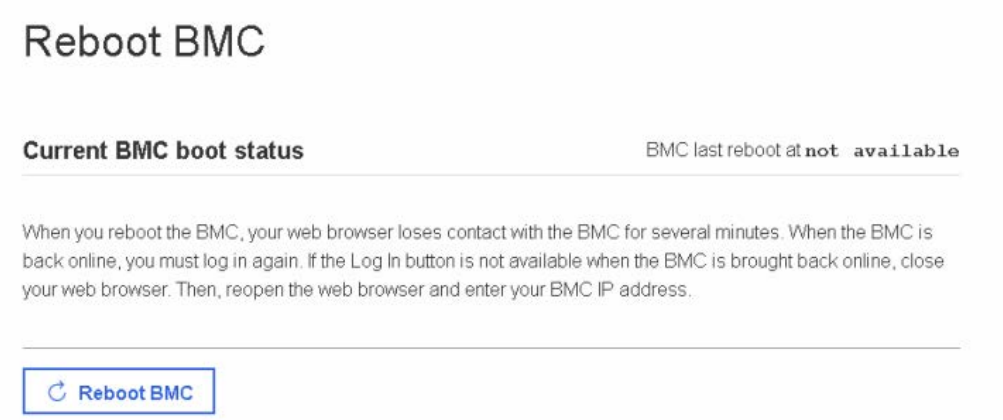

6. Click the **Reboot BMC** button.

Note When the BMC is rebooted the browser loses contact with the BMC for several minutes. The log in procedure must be performed when the BMC is back online. If the log in button is not available, close the browser, reopen it and enter the BMC IP address.

9.1.2.2. Resetting with the firmware recovery button

Procedure

Push in the button (A) for more than 10 seconds using a pointed object

The BMC resets to default factory settings.

Rear view

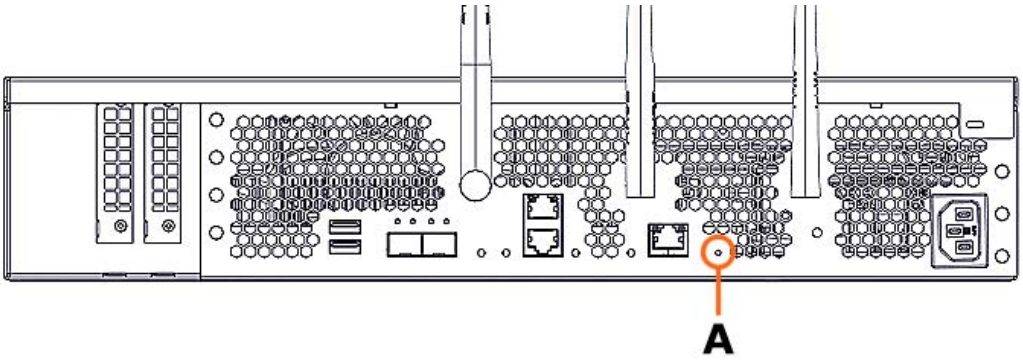

The BMC reboots automatically.

9.2. Recovering firmware

Important **ATTENTION: Please read carefully the safety instructions before you perform the procedures described in this manual.**
Multilingual Safety Notices Guide

C004 **CAUTION**
C004:
Static electricity can damage the server and other electronic devices. To avoid damage, keep static-sensitive devices in their static-protective packages until you are ready to install them.
To reduce the possibility of damage from electrostatic discharge, observe the following precautions:
Limit your movement. Movement can cause static electricity to build up around you.
Wear an electrostatic-discharge wrist strap.
Handle the device carefully, holding it by its edges or its frame.
Do not touch solder joints, pins, or exposed circuitry.
Do not leave the device where others can handle and damage it.
While the device is still in its static-protective package, touch it to an unpainted metal surface on the outside of the server for at least 2 seconds. This drains static electricity from the package and from your body.
Remove the device from its package and install it directly into the server without setting down the device. If it is necessary to set down the device, put it back into its static-protective package. Do not place the device on the server cover or on a metal surface.
Take additional care when you handle devices during cold weather. Heating reduces indoor humidity and increases static electricity.

9.2.1. Recovering BMC firmware

This sections details the operations to perform to recover the BMC main image.

See SHC Reference Guide for more information.

Prerequisites

- A laptop computer with the Chrome or Firefox browser installed
- A laptop is connected to the BullSequana Edge BMC port
- The server BMC has an IP address allocated
- The BullSequana Edge server is in the standby power mode

Procedure

1. **Check the server power status**

   Check that the server is in the standy power mode.

2. **Push in the button (A) using a pointed object**

Rear view

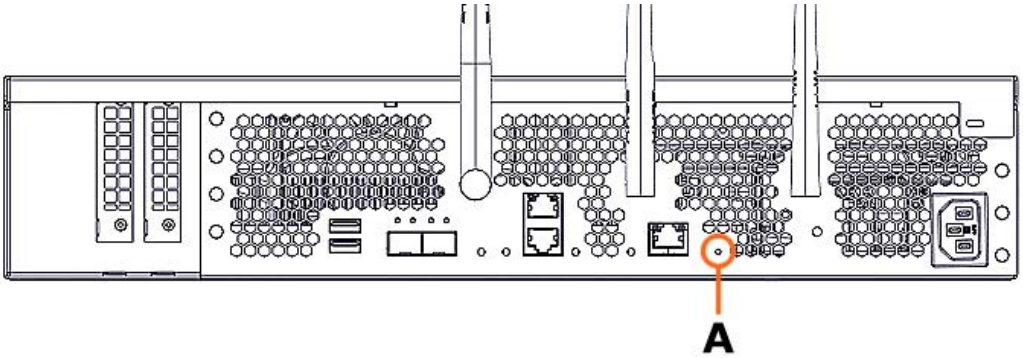

3. **Connect to the SHC**

4. **Update the firmware**
   1. From the **Configuration** tab, click **Firmware**. The **Firmware** page opens.
   2. From the **Specify image file location** section:
      a. Either click **Choose a file** > **Upload firmware** to upload an image file from a workstation.
      b. Or click **Download firmware** to download an image file from a TFTP server.

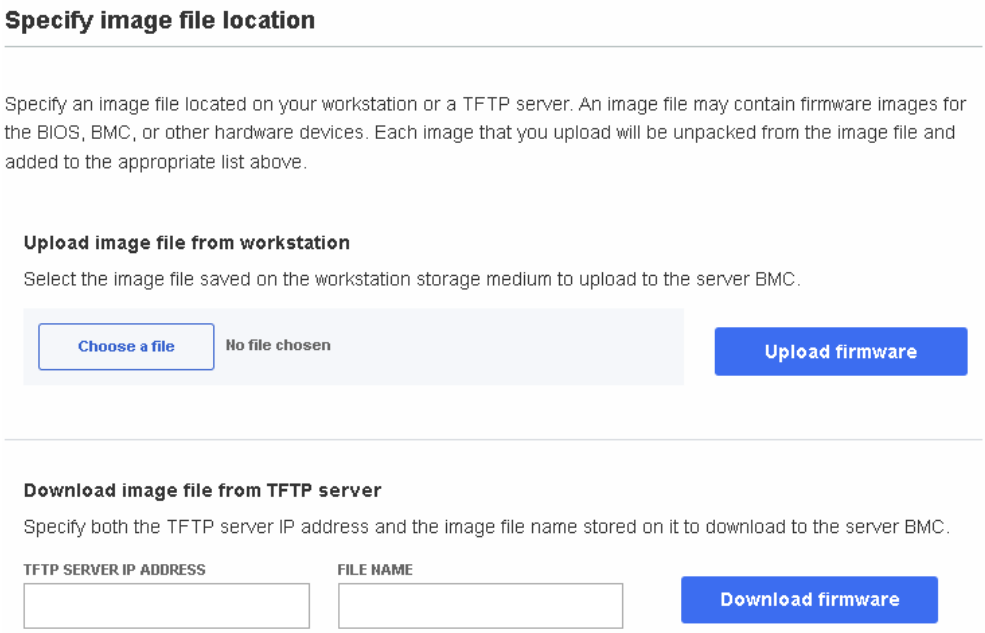

5. Activate the BMC image

1. Select the BMC image using the boot priority arrows.
2. Click **Activate.**

3. The Confirm BMC firmware file activation page opens. Click **Activate firmware file and automatically reboot BMC**.

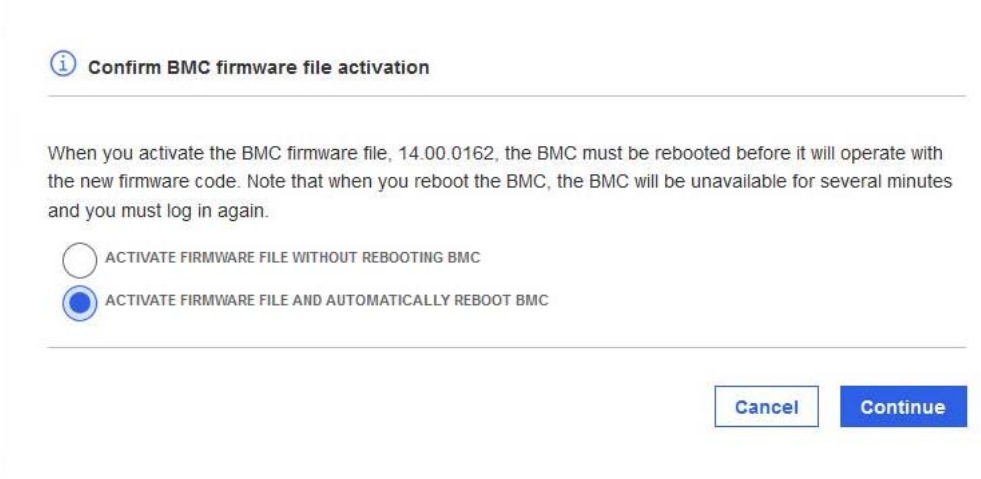

4. Click **Continue**.

Notes
- When the BMC is rebooted the browser loses contact with the BMC for several minutes. The normal log in procedure must be performed when the BMC is back online. If the log in button is not available, close the browser, reopen it and enter the BMC IP address.
- Earlier firmware versions disappear from the BMC image list once a new version has been activated.

9.2.2. Recovering BIOS and CPLD firmware

This sections details the operations to perform to recover the BIOS and the CPLD main images.

Important	**Check that the latest BMC firmware version is installed. If not, the BMC firmware must be updated before the BIOS and CPLD firmware.**

See	SHC Reference Guide for more information.

Prerequisites

- A laptop computer with the Chrome or Firefox browser installed
- A laptop is connected to the BullSequana Edge BMC port
- The server BMC has an IP address allocated
- The BullSequana Edge server is in the standby power mode

Procedure

1. **Check the server power status**

   Check that the server is in the standy power mode.

2. **Push in the button (A) using a pointed object**

   Rear view

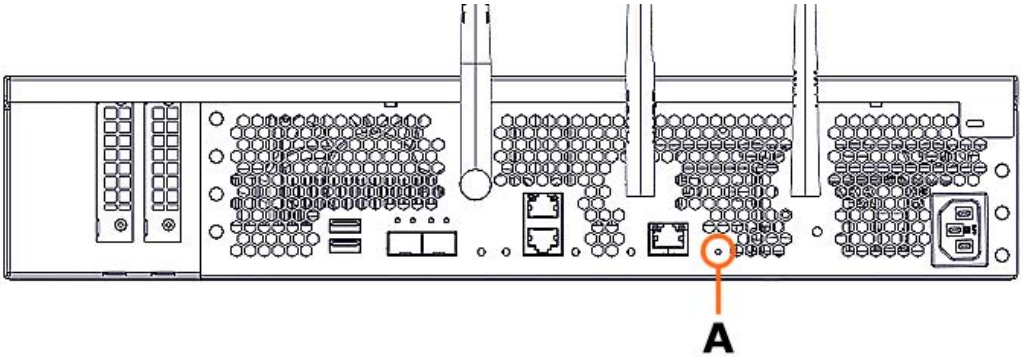

3. **Connect to the SHC**

4. **Update the firmware**
   1. From the **Configuration** tab, click **Firmware**. The **Firmware** page opens.
   2. From the **Specify image file location** section:
      a. Either click **Choose a file** > **Upload firmware** to upload an image file from a workstation.
      b. Or click **Download firmware** to download an image file from a TFTP server.

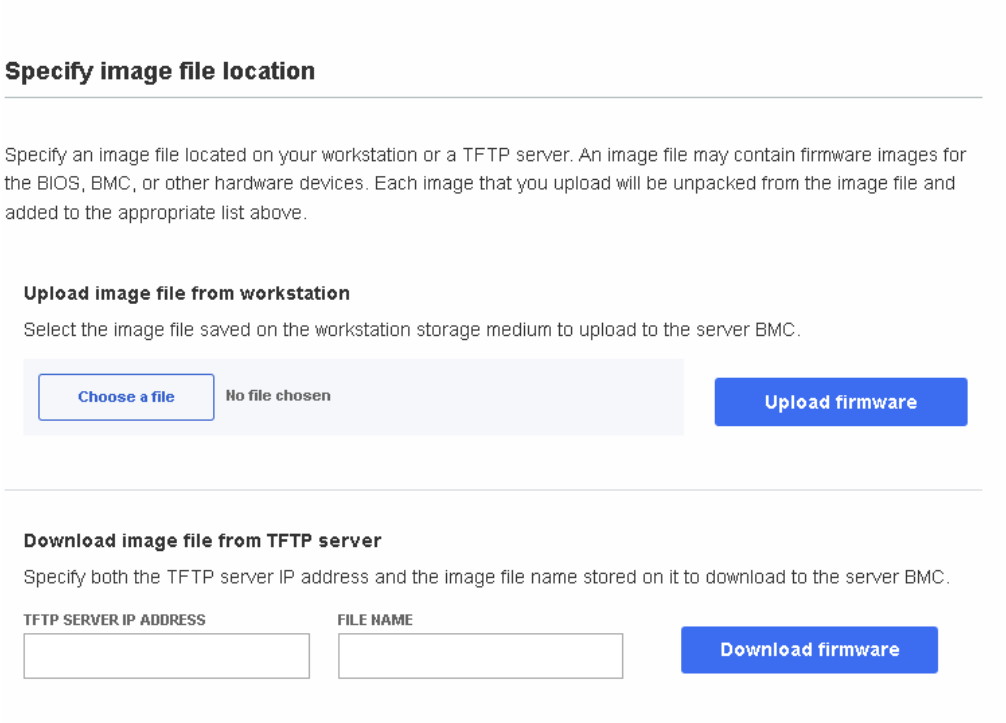

5. **Activate the firmware**
   1. Select the firmware using the boot priority arrows.
   2. Click **Activate.**

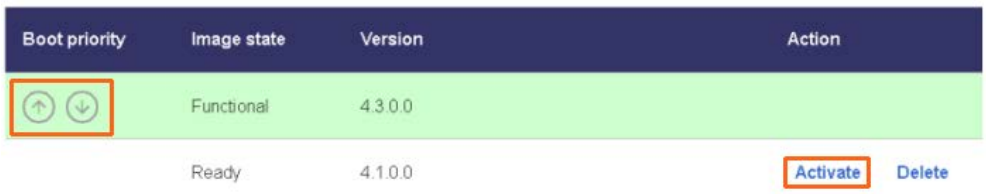

6. **Wait two to three minutes and then refresh the page**

   The firmware is now active.

7. **Perform an AC Off/AC On cycle of the server to allow normal boot**

Appendix A. Servicing the top aesthetic cover

A.1. Removing the top aesthetic cover

Required Tools

None

Procedure

1. **Unlock the top aesthetic cover**

   Pull the plunger on the left and push the latch on the right using both your hands.

   Rear view

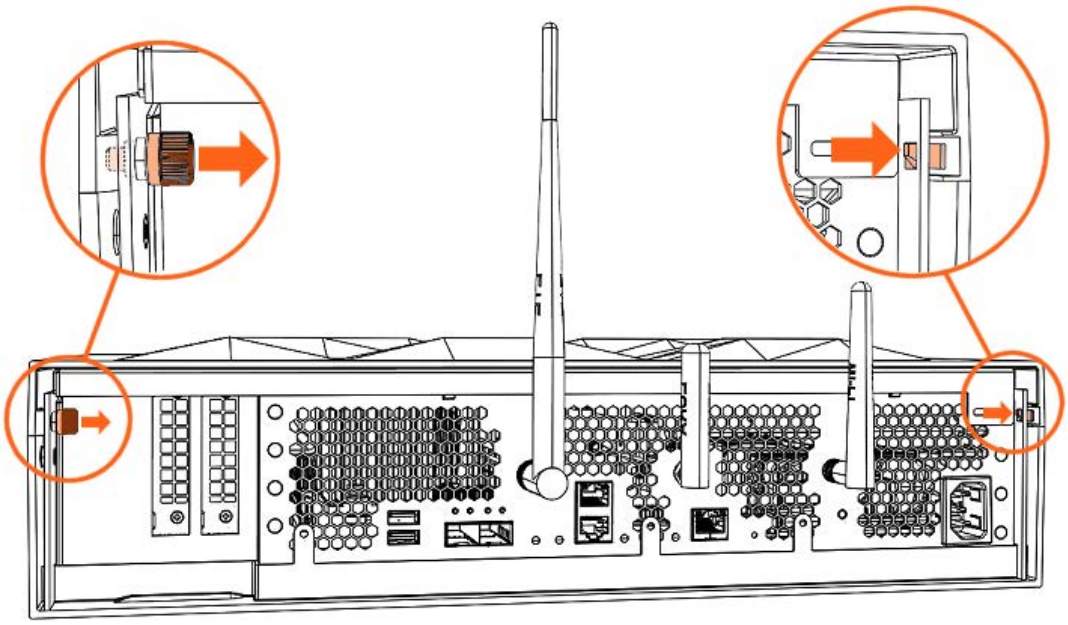

2. **Slide the top aesthetic cover**

Rear view

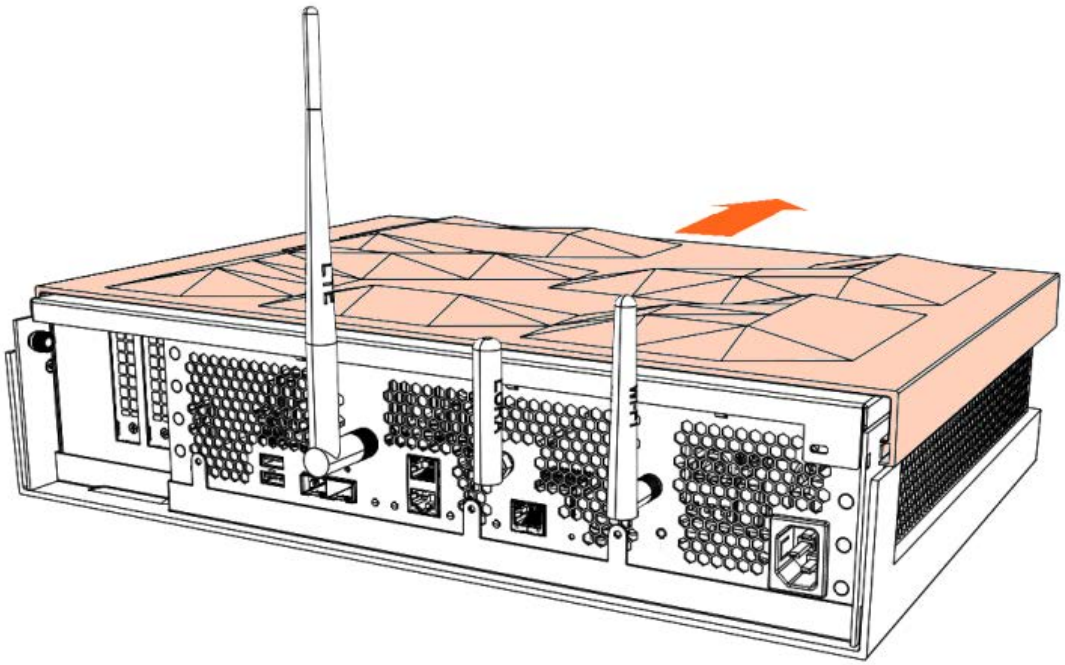

3. **Remove the top aesthetic cover**

Rear view

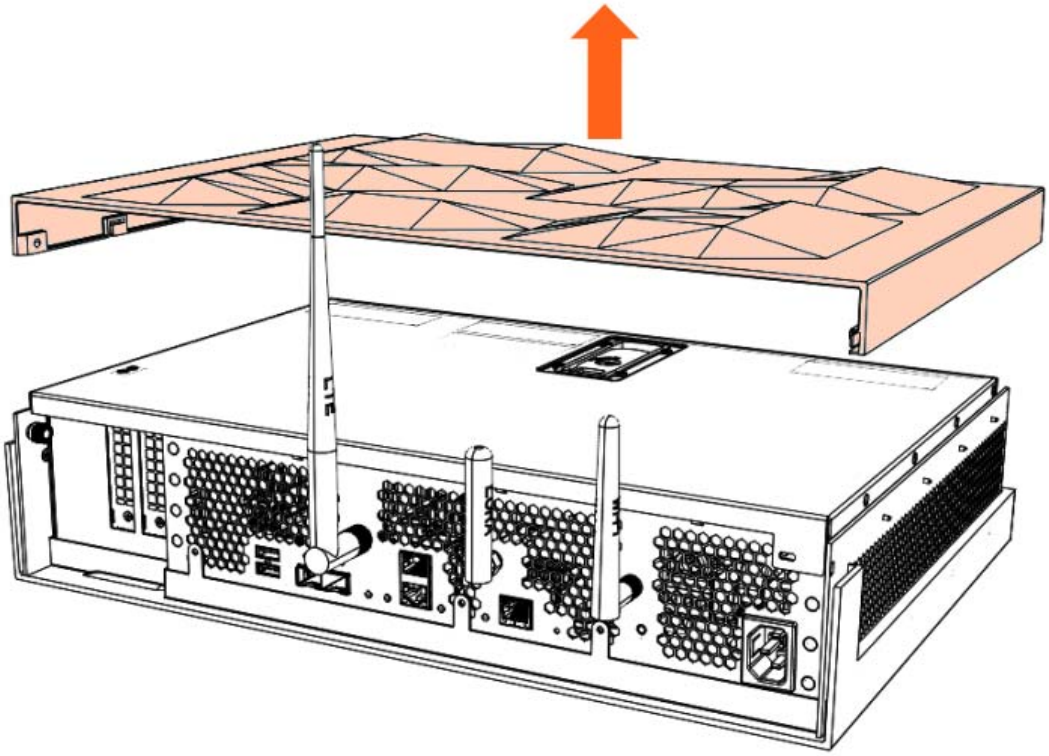

A.2. Installing the top aesthetic cover

Required Tools

None

Procedure

1. **Install the top aesthetic cover**

   Put the top aesthetic cover into place using the fool-proofers.

   Rear view

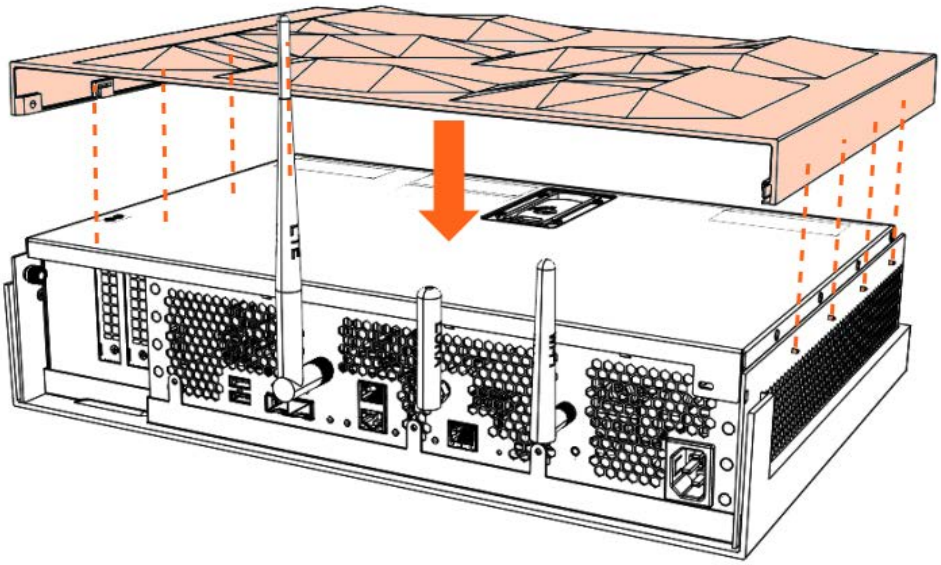

2. **Slide the top aesthetic cover until it is locked into place**

   Rear view

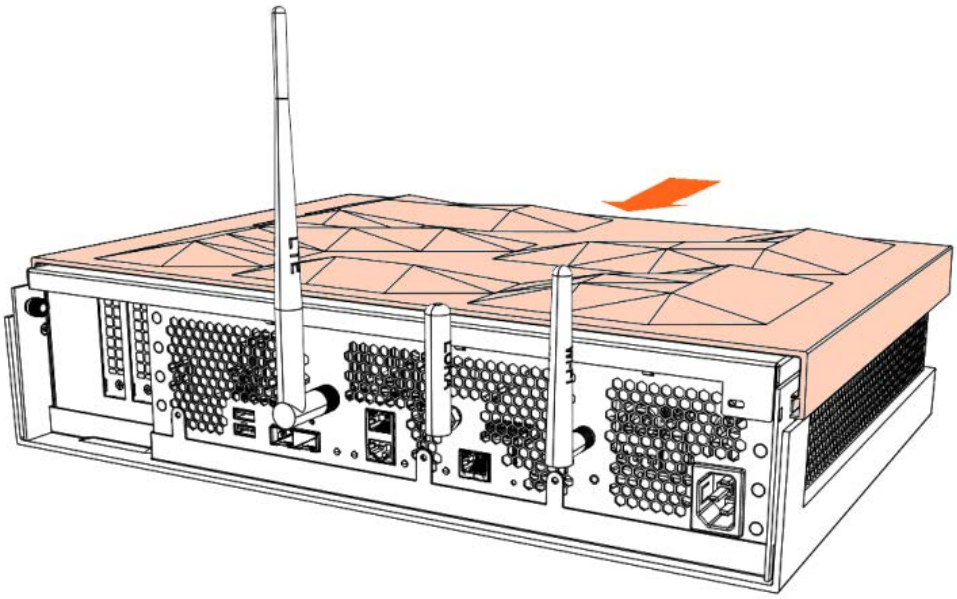

Appendix B. Servicing fan filters

Important **ATTENTION: Please read carefully the safety instructions before you perform the procedures described in this manual.**
Multilingual Safety Notices Guide

C004 **CAUTION**
C004:
Static electricity can damage the server and other electronic devices. To avoid damage, keep static-sensitive devices in their static-protective packages until you are ready to install them.
To reduce the possibility of damage from electrostatic discharge, observe the following precautions:
Limit your movement. Movement can cause static electricity to build up around you.
Wear an electrostatic-discharge wrist strap.
Handle the device carefully, holding it by its edges or its frame.
Do not touch solder joints, pins, or exposed circuitry.
Do not leave the device where others can handle and damage it.
While the device is still in its static-protective package, touch it to an unpainted metal surface on the outside of the server for at least 2 seconds. This drains static electricity from the package and from your body.
Remove the device from its package and install it directly into the server without setting down the device. If it is necessary to set down the device, put it back into its static-protective package. Do not place the device on the server cover or on a metal surface.
Take additional care when you handle devices during cold weather. Heating reduces indoor humidity and increases static electricity.

B.1. Fan filter description

The fan filters are located behind the front bezel.

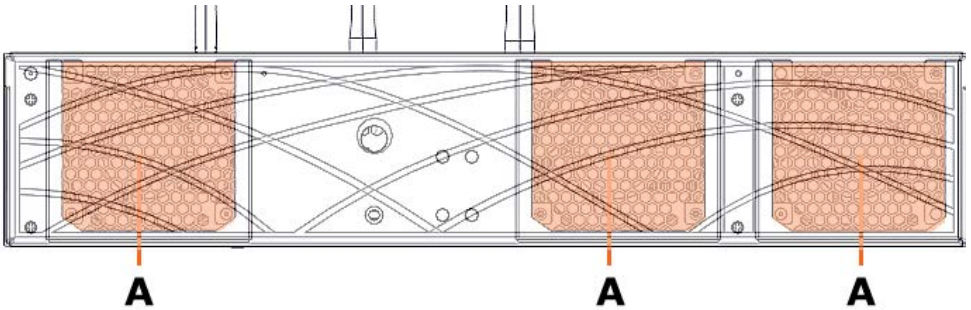

Mark	Description	Quantity
A	Fan filter	3

The filters must be checked regularly. They must be replaced if there are signs of dust on them and at least once every 12 months.

Air filters are not covered by warranty services and may be purchased from Atos in sets of three.

B.2. Removing a fan filter

Required Tools

None

Procedure

1. **Unpack the new component on a clean ESD-protected work surface**
2. **Power off the server**
3. **Disconnect the power supply cable**

   Rear view

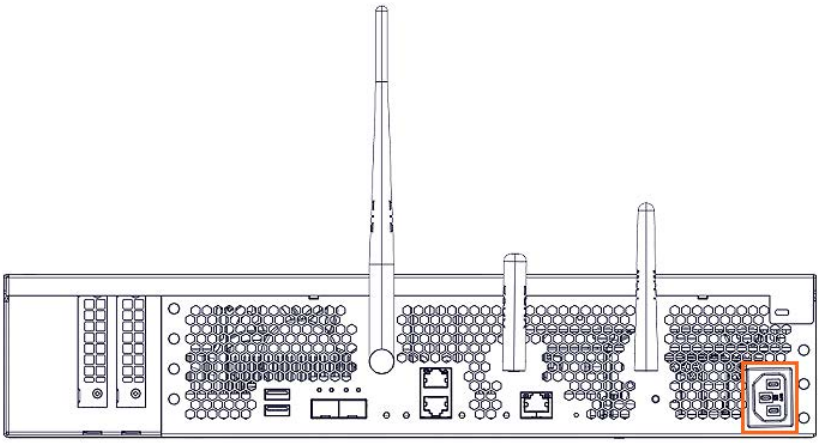

4. **Remove the bezel**

   Front view

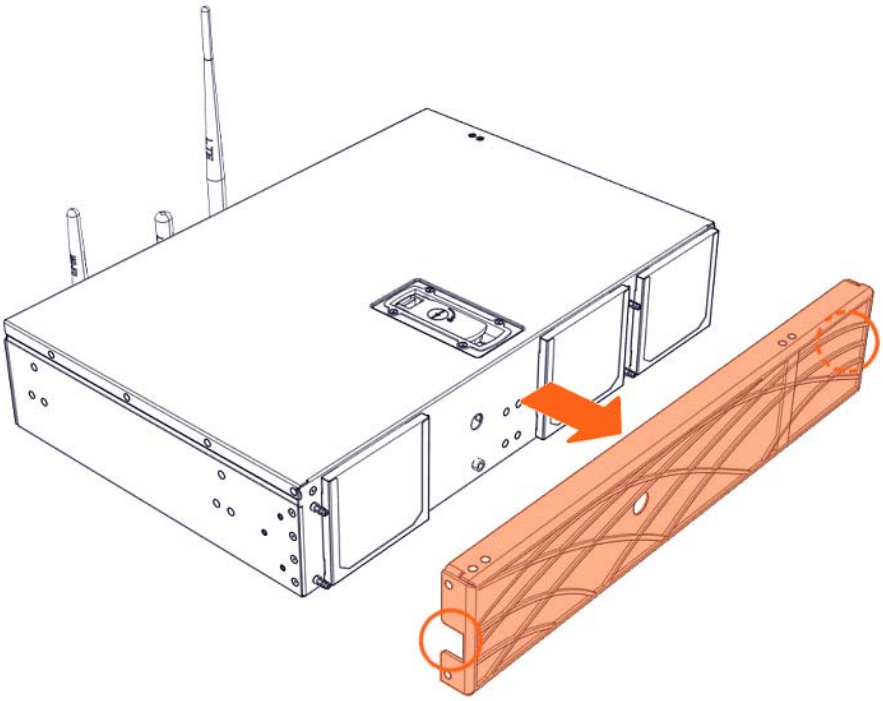

5. Remove the fan filter

Front view

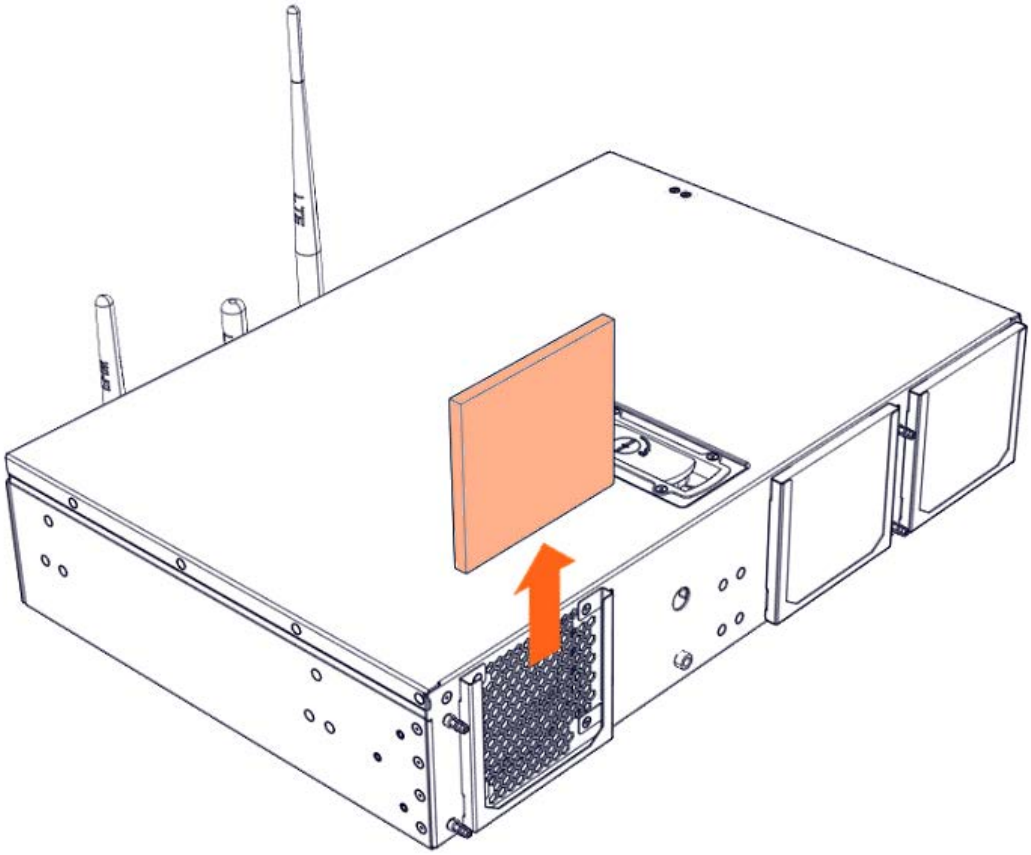

B.3. Installing a fan filter

Required Tools

None

Procedure

1. **Take hold of the new component**

2. **Install the fan filter**

Front view

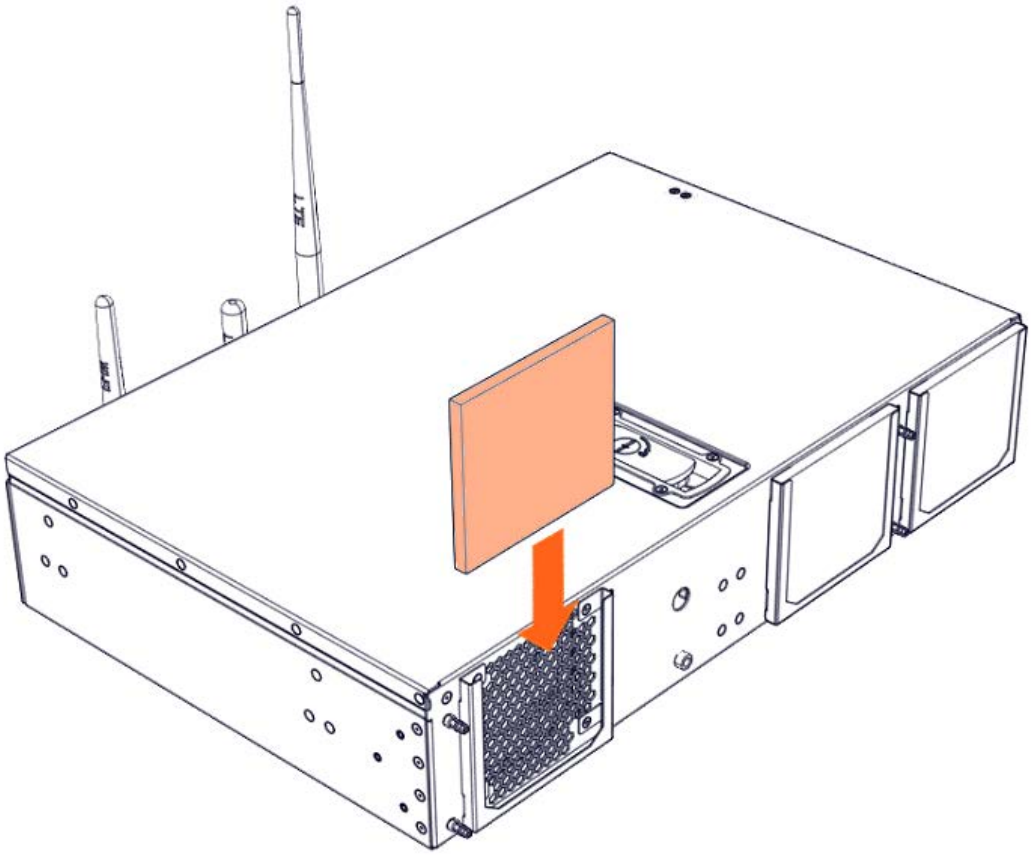

3. **Install the bezel**

Front view

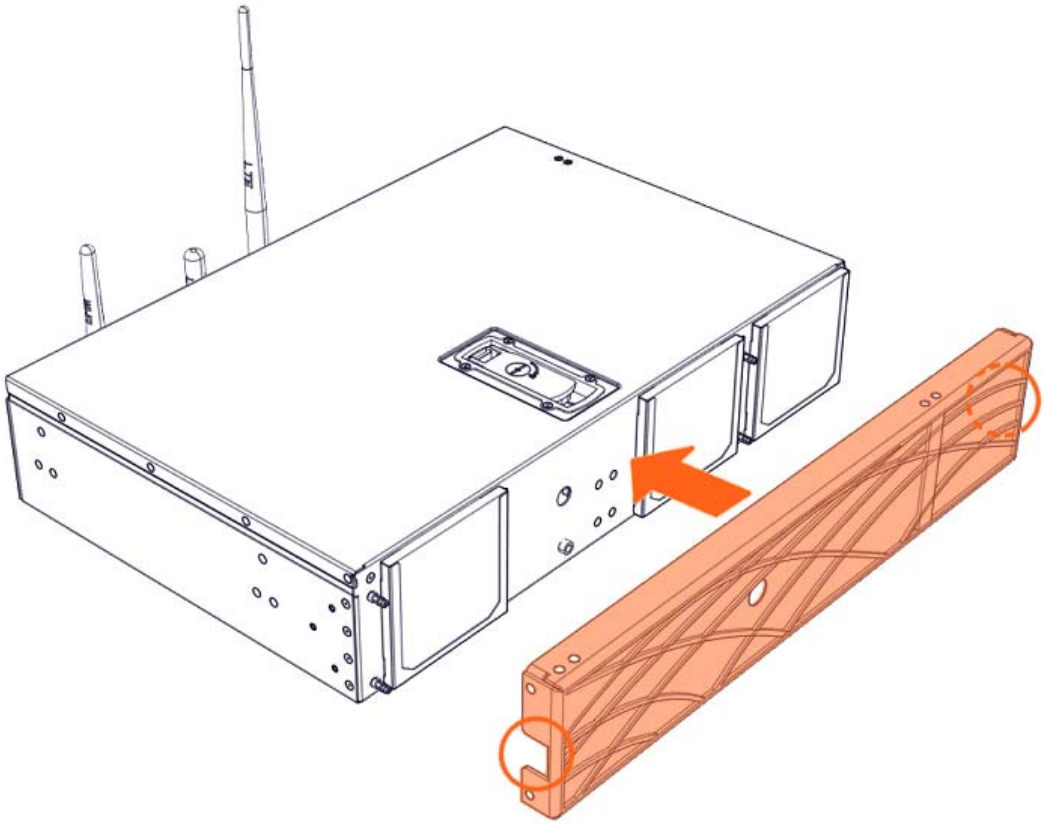

4. **Connect the power supply cable**

Rear view

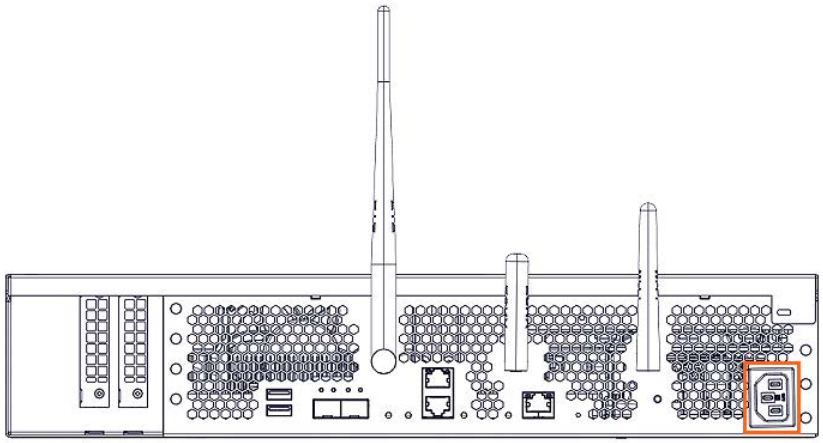

5. **Power on the server**

Bull Cedoc
357 avenue Patton
BP 20845
49008 Angers Cedex 01
FRANCE