NOVASCALE

NovaScale R440 E1

User's Guide

REFERENCE
86 A1 83EV 00

NOVASCALE

NovaScale R440 E1

User's Guide

Hardware

January 2008

BULL CEDOC
357 AVENUE PATTON
B.P.20845
49008 ANGERS CEDEX 01
FRANCE

REFERENCE
86 A1 83EV 00

Proprietary Notice and Liability Disclaimer

The information disclosed in this document, including all designs and related materials, is the valuable property of NEC Computers and/or its licensors. NEC Computers and/or its licensors, as appropriate, reserve all patent, copyright and other proprietary rights to this document, including all design, manufacturing, reproduction, use, and sales rights thereto, except to the extent said rights are expressly granted to others.

To allow for design and specification improvements, the information in this document is subject to change at any time, without notice. Reproduction of this document or portions thereof without prior written approval of NEC Computers is prohibited.

The Bull product(s) discussed in this document are warranted in accordance with the terms of the Warranty Statement accompanying each product. However, actual performance of each product is dependent upon factors such as system configuration, customer data, and operator control. Since implementation by customers of each product may vary, the suitability of specific product configurations and applications must be determined by the customer and is not warranted by Bull.

Trademarks

NEC ESMPRO, NEC DianaScope, NEC MWA, and ExpressBuilder are trademarks or registered trademarks of NEC Corporation.

NovaScale is a registered trademark of Bull SAS.

Adobe, and Adobe Acrobat are registered trademarks of Adobe Systems, Incorporated.

Microsoft, Microsoft Windows, Windows NT, Windows 95, Windows 98, Windows2000 and Windows Server 2003 are all registered trademarks of Microsoft Corporation.

MS-DOS is a registered trademark of Microsoft Corporation.

Intel and Xeon are registered trademarks of Intel Corporation.

All other product, brand, or trade names used in this publication are the trademarks or registered trademarks of their respective trademark owners.

Copyright © NEC Computers SAS 2006

Suggestions and criticisms concerning the form, content, and presentation of this manual are invited. A form is provided at the end of this manual for this purpose.

The information in this document is subject to change without notice. Bull will not be liable for errors contained herein, or for incidental or consequential damages in connection with the use of this material.

Table of Contents

Table of Contents 4

Text Conventions 11

Safety Notices 12

Regulatory Information 12
European Notice 12
USA and Canada Notice 13
Modifications to the Product..... 13
Connections and Remote Earths 13
Power Supply and Cables 14
Batteries 14
Chassis Cover Removal and Replacement 14
Laser Compliance Statement 15
Warning - Hazardous Voltage! 15
Warning -Avoid Electrostatic Discharge!..... 15
Product Disposal 15
Using This Guide 16
Related Documents 17
Care and Handling 18

System Overview 19

Server Chassis 20
External View 20
Front View with Front Bezel Closed 21
Front View with Front Bezel Removed..... 22
Rear View 24
Internal View (3.5-inch Disk with Non-redundant Power Supply Model)..... 27
Internal View (3.5-inch Disk with Redundant Power Supply Model) 28
Internal View (2.5-inch Disk Model) 29
System board Features 30
Motherboard..... 30
Remote Management Feature 31
Degradation Feature..... 32
Memory RAS Features 32
Remote Power-On Feature (Wake On LAN) 32
AC-Link Feature 32
Standard Features 33
Server Security..... 35
ExpressBuilder DVD 37
With the ExpressBuilder DVD you can:..... 37
Software End-User License Agreement 37
Using a Client Computer equipped with a CD Drive 37

Setting Up the Server 39

Overview 39
Selecting a Site 40
Unpacking the Server 41
Installing the Server into a Rack 42
Before Installation 42
Installing the Server 43
Removal 49
Making Connections 51
Connecting the Power Cord 54
Using the Server 55
Removing and Installing the Front Bezel 56
Powering On Your Server 58
POST Execution Flow 59
Powering Off Your Server 61
Forcing a Power Shutdown 61
BIOS Setup Utility 63
Using the BIOS Setup Utility 63
BIOS Setup Configuration Settings 64

Configuring Your Server 65

Overview 65
Main Menu 66
Advanced Menu 69
Security Menu 73
Server Menu 75
Boot Menu 81
Exit Menu 82
RAID Configuration 83
RAID 83
Configuration by Onboard RAID Controller (3.5-inch Disk Model) 89
Installing the Hard Disk Drives 89
Enabling RAID Feature 90
Running LSI Software RAID Configuration Utility 91
Operating Procedures for the Configuration Utility 93
Manual Rebuild 98
Setting Hot Spare 99
Check Consistency 101
Others 102
LSI Software RAID Configuration Utility and Universal RAID Utility 103
Terms 103
Number and ID 103
Adapter and RAID Controller 103
Logical Drive 103
RAID system 104
Physical Drive and Physical Device 104
Priority Settings 104
Configuration by Internal RAID Controller (2.5-inch Disk Model) 106
Rebuild 106
Manual Rebuild 106

Auto Rebuild 106
Patrol Read 107
Consistency Check 107
Background Initialize 108
Reconstruction 109
Before Using WebBIOS 110
Using WebBIOS 112
Configuring a Virtual Disk 124
Operation of Various Features 140
WebBIOS and Universal RAID Utility 148
Configuring Motherboard Jumpers 152
Clearing CMOS or Password 155

Upgrading Your System Information 156

General Safety Information 156
Static Precautions 157
Equipment Log 158
Tools Recommended for Upgrading Your Server 158
Preparing Your Server for Upgrade 159
Installing and Removing a Hard Disk Drive 161
3.5-inch Disk Model 161
2.5-inch Disk Model 163
Installing a Hard Disk Drive 164
Removing a Hard Disk Drive 166
Notes on replacing Hard Disk Drives in a RAID Configuration 169
Installing and Replacing a Power Supply Unit (Redundant Power Supply Models) 170
Installing a Power Supply Unit 170
Replacing a Failing Power Supply Unit 173
Removing and Replacing the Top Cover 175
Removing and Installing the Drive Cover 176
Removing and Installing the Logic Cover 178
Installing or Removing Random Access Memory 180
DIMMs Installation Order 181
Installing DIMMs 181
Removing DIMMs 183
Using the Memory RAS Features 183
Memory Mirroring 185
Online Spare Memory 187
Installing and Removing a Microprocessor 189
Installing a Microprocessor 191
Removal 197
Installing and Removing a PCI Board 198
Installing a PCI Board 200
Removing a PCI Board 203
Using the Internal Hard Disk Drives in the RAID System 204
3.5-inch Disk Model 205
2.5-inch Disk Model 207
Disk Expansion Unit 208
Replacing the Battery 209

Problem Solving 210

Static Precautions. 210
Resetting the Server. 211
Troubleshooting Guide 212
System Viewers 212
Problems at initial System Start-up 213
Problems After the System Has Been Running Correctly 214
Problems Running New Application Software. 215
Problems and Suggestions 216
Solving Problems 217
Error Messages on the Virtual LCD 217
Problems with the Server 220
RAID System and RAID Controller 225
Problems with Windows 226
Problems with ExpressBuilder 230
Problems with Express Setup 230
Problems with Windows Autorun Menu 231
Collecting Dr. Watson Diagnostic Information 233
Memory Dump 234
Preparing for Memory Dumping 234
Saving the Dump File 234
Recovery for Windows Server 2003 x64 Editions and Windows Server 2003 235
Maintenance Tools 235
Maintenance Tools with Remote Console 238
Error Messages. 240
Error Messages 240
POST Error Messages 241
Beep Codes 245
Status Indicators. 246
POWER Lamp 246
Status Lamp 247
Disk Access Lamp 248
ACT Lamp 248
UID Lamp (UID) 248
Disk Access Lamp 248
Hard Disk Lamp 249
LAN Connector Lamps 251
AC Power LED (Redundant Power Supply Only) 251

Appendix 1: Specifications 253

Appendix 2: Interrupt Requests 255

Appendix 3: Maintenance 256

Making Backup Copies. 256
Cleaning. 256
Cleaning the External Surfaces of the Server 257
Cleaning the Interior of the Server 257
Cleaning the Keyboard 258
Cleaning the Mouse 259
Cleaning an Optical Drive and Optical Disc 259

System Diagnostics 261
Test Items 261
Starting and Ending the System Diagnostics 262

Appendix 4: Installing the Operating System with Express Setup 264

About Express Setup 265
Microsoft Windows Server 2003 267
Notes on the Windows Installation 267
Installing Windows Server 2003 271
Installing and Setting the Device Drivers 282
PROSet 282
Network Driver 283
Optional Network Board Driver 284
Installation of the Optional Network Board Driver 284
Adapter Fault Tolerance (AFT)/Adaptive Load Balancing (ALB) 284
Graphics Accelerator Driver 286
SCSI Controller Driver 286
Installing SAS Controller Driver (LSI SAS3443E-R) 286
Installing the RAID controller Driver
(LSILogic MegaRAID SAS 8480E) 287
Available switch options for the Windows Server 2003 Boot.ini file. 288
Solving Problems Settings 289
Memory Dump (Debug Information) 289
Windows Dr. Watson 291
Network Monitor 292
Installing Maintenance Utilities 293
Updating the System - Applying Service Pack - 294
Making Backup Copies of System Information 295
Installing with the OEM-FD for Mass Storage Device 295

Appendix 5: Installing Microsoft Windows Server 2003
without Express Setup 296

Notice 296
Service Packs supported by ExpressBuilder 296
Installing Service Pack 296
Updating System 296
Re-installing to the Hard Disk which has been upgraded to Dynamic Disk 296
Magneto-Optical device 297
Media such as DAT 297
Floppy Disk Drive 297
About the Upgrade to Windows Server 2003 R2 297
About the System Partition Size 298
Installing Microsoft Windows Server 2003 300
Creating "Windows 2003 OEM-Disk for ExpressBuilder" 300
Windows Server 2003 Clean Installation 302
Procedure for License Authentication 303
Updating the System - Applying Service Pack - 304
Driver Installation and Device Settings 309
PROSet 309
Network Driver 309

Re-install the Network Driver 311
Adapter Fault Tolerance (AFT)/Adaptive Load Balancing (ALB) 311
Graphics Accelerator Driver 311
Installing SCSI Controller Drivers 311
Installing SAS Controller Driver (LSI SAS3443E-R) 311
Installing a RAID controller Driver (LSILogic MegaRAID SAS 8480E) 312
About the Windows Activation 313
Available Switch Options for the Windows Server 2003 Boot.ini File 315
Setting for Collecting Memory Dump (Debug Information) 316

Appendix 6: Installing Microsoft Windows Server 2003 x64 Editions without Express Setup 317

Notice 317
Service Packs supported by ExpressBuilder 317
Installing Service Pack 317
Updating System 317
Re-installing to the Hard Disk which has been upgraded to Dynamic Disk 317
Magneto-Optical device 318
Media such as DAT 318
Floppy Disk Drive 318
About the System Partition Size 319
Installing Microsoft Windows Server 2003 x64 Editions 320
Creating the "Windows 2003 x64 EditionsOEM-Disk for ExpressBuilder" 320
Windows Server 2003 x64 Editions Clean Installation 322
Updating the System - Applying Service Pack - 323
Driver Installation and Device Settings 328
PROSet 328
Network Driver 329
Re-install the Network Driver 330
Optional Network Board Driver 330
Adapter Fault Tolerance (AFT)/Adaptive Load Balancing (ALB) 331
Graphics Accelerator Driver 332
Installing SCSI Controller Drivers 333
Installing SAS Controller Driver (LSI SAS3443E-R) 333
Installing a RAID controller Driver (LSILogic MegaRAID SAS 8480E) 333
About the Windows Activation 334
Setting for the Memory Dump Collection (Debug Information) 336

Appendix 7: Installing and Using Utilities 337

ExpressBuilder 338
Autorun Menu 341
Parameter File Creator 342
Parameters File 342
NEC ESMPRO 354
Functions and Features 354
NEC DianaScope 355
Universal RAID Utility 356
Setup with Express Setup 356
Manual Setup 356

Using Universal RAID Utility via Network 357
Easy Configuration 357
Creating Logical Drive of RAID 6 357

Appendix 8: Equipment Log 358

Hardware 359
Software. 361

Text Conventions

This guide uses the following text conventions.

Warnings, cautions, and notes have the following meanings:

Warning

Warnings alert you to situations that could result in serious personal injury or loss of life.

Caution

Cautions indicate situations that can damage the system hardware or software.

***Notes**: give important information about the material being described.*

- Names of keyboard keys are printed as they appear on the keyboard. For example, **Ctrl**, **Alt**, or **Enter**.
- Text or keystrokes that you enter appear as boldface type. For example, type **abc123** and press **ENTER**.
- File names are printed in upper case letters. For example, AUTOEXEC.BAT.

Safety Notices

Caution

To reduce the risk of electric shock which could cause personal injury, follow all the safety notices.

Symbols are shown in your documentation and on your equipment to indicate safety hazards.

Regulatory Information

European Notice

Products with the CE marking comply with both the Electromagnetic Compatibility Directive (89/336/EEC) and the Low Voltage Directive (73/23/EEC) - modified by the Directive 93/68/EEC - issued by the Commission of the European Community.

Compliance with these directives implies conformity to the following European Standards:

- EN55022: Radio Frequency Interference
- EN55024 (1998+A1:2001): Immunity characteristics
- EN6100-3-2: Limits for harmonic current emissions
- EN6100-3-3: Limitation of voltage fluctuation and flicker in low-voltage supply system
- EN60950-1 (2001): Product Safety

Warning

This is a Class A product. In domestic environment this product may cause radio interference in which case the user may be required to take adequate measures (EN55022).

If your system includes a telecommunication network board, the input/output socket is classified as Telecommunication Network Voltage (TNV-3).

USA and Canada Notice

Products with UL marking comply with the following UL standards:

- UL 1950 (3rd edition 1998)

Products with FCC marking comply with the following FCC standards

- FCC part 15

The model type/ref. used for UL and FCC certification can be found on the regulatory labels stuck on your system.

The equipment has been tested and found to comply with the limits for a Class A or B digital device, pursuant to part 15 of the FCC rules. These limits are designed to provide reasonable protection against harmful interference when the equipment is operated in a commercial environment. This equipment generates, uses, and can radiate radio frequency energy, and if not installed and used in accordance with the instruction manual, may cause harmful interference to radio communications. Operation of this equipment in a residential area is likely to cause harmful interference, in which case the user will be required to correct the interference at his own expense.

Modifications to the Product

CE and FCC Marking

We cannot be held responsible for modifications made by the User and the consequences thereof, which may alter the conformity of the product with the CE or FCC Marking.

Connections and Remote Earths

PELV (Protected Extra Low Voltage)

To ensure the extra-low voltage integrity of the equipment, only connect equipment with mains-protected electrically-compatible circuits to the external ports.

SELV (Safety Extra Low Voltage)

Every input and output of this product is classified as Safety Extra Low Voltage.

Remote Earths

To prevent electrical shock, connect all local (individual office) systems and system support equipment to the same electrical circuit of the building wiring. If you are unsure, check the building wiring to avoid remote earth conditions.

Building Supply

Only connect the equipment to a building supply that is in accordance with current wiring regulations in your country. In the U.K., those are the IEE regulations.

Power Supply and Cables

Power Supply

- The DC push-button on/off switch on the front panel does not turn off the system AC power. +5vdc is present on the system board whenever the AC power cords are connected between the system and an AC outlet. Before doing the procedures in this manual, make sure that your system is powered off and unplug the AC power cords from the back of the chassis. Failure to disconnect power before opening your system can result in personal injury and equipment damage.
- Under no circumstances should the user attempt to disassemble the power supply. The power supply has no user-replaceable parts. Inside the power supply are hazardous voltages that can cause serious personal injury. A defective power supply must be returned to your dealer.

Cables

- In the U.S.A. and Canada, the power cord must be a UL-listed detachable power cord (in Canada, CSA-certified), type ST or SJT, 16 AWG, 3-conductor, provided with a moulded-on NEMA type 5-15 P plug cap at one end and a moulded-on cord connector body at the other end. The cord length must not exceed 9 feet (2.7 meters).
- Outside the U.S.A. and Canada, the plug must be rated for 250 VAC, 10 amp minimum, and must display an international agency approval marking. The cord must be suitable for use in the end-user country. Consult your dealer or the local electrical authorities if you are unsure of the type of power cord to use in your country. The voltage change occurs via a switch in the power supply.
- The detachable power supply cords are intended to serve as the disconnect devices.
- For PLUGGABLE EQUIPMENT, the socket-outlet shall be installed near the equipment and shall be easily accessible.
- This equipment has a 3-wire, grounded power cords. To prevent electrical hazards, do not remove or defeat the ground prong on the power cords. Replace a power cord if it gets damaged. Contact your dealer for an exact replacement.

Batteries

Lithium batteries can be dangerous. Improper handling of lithium batteries may result in an explosion. Dispose of lithium batteries as required by local ordinance. Also *see “Product Disposal” on page 15*

Chassis Cover Removal and Replacement

When servicing your system, make sure to replace the chassis cover and secure it with the screws before plugging in the power cable and turning it on. The chassis cover ensures proper airflow and cooling.

Laser Compliance Statement

The optical devices are tested and certified to be compliant with International Electro-technical Commission IEC60825-1 and European EN60825-1 standards for Class 1 laser products.

Class 1 laser products are not considered hazardous. The optical devices are designed such that there is never human access to laser radiation above a Class 1 level during normal operation or prescribed maintenance conditions.

The optical devices installed in your system is designed for use solely as a component of such electronic product and therefore does not comply with the appropriate requirements of Code of Federal Regulation Sec. 1040.10 and Sec. 1040.11 for **COMPLETE** laser products

Warning - Hazardous Voltage!

Hazardous voltage is present inside your system when it is connected to an AC supply even when the system's power switch is off. Exposure to Hazardous Voltage could cause personal injury. To reduce the risk of electric shock which could cause personal injury, follow all safety notices. The symbols shown are used in your documentation and on your equipment to indicate safety hazards.

Warning -Avoid Electrostatic Discharge!

Circuit cards and integrated circuits can be easily damaged by static electricity. To reduce risk of damage, store them in protective packaging whenever they are not installed in your system.

Before you install or remove memory modules, video memory, disk drives, circuit cards or other devices, protect them from static electricity. To do so, make sure your system's power switch is **OFF**. Then, unplug the system's AC power cord(s). Wear an anti-static wrist strap (available at electronic supplies stores) to handle the device you want to install. Be sure to connect the wrist strap to an unpainted metal portion of the system chassis.

As an alternative, you can dissipate electrostatic buildup by touching an unpainted metal portion of the system chassis with one hand. Handle the device you are installing with the other hand, and maintain continuous contact with the unpainted portion of the chassis until it is installed in the system.

Product Disposal

The Waste Electrical and Electronic Equipment (WEEE) Directive requires that used electrical and electronic products must be disposed of separately from normal household waste in order to promote reuse, recycling and other forms of recovery and to reduce the quantity of waste to be eliminated with a view to reduce landfill. WEEE includes accessories such as keyboard, mouse, remote control, speakers, etc. When you dispose of such products, please follow the agreement made between you and us and/or your distributor.

Using This Guide

This user guide provides a reference to information about the Bull NovaScale R440 E1 server. Its goal is to familiarize you with your server and the tasks necessary for server configuring and upgrading.

- Chapter 1 contains information about the front, back and internal features of your server and about the motherboard. It lists the features of your server and provides details about the ExpressBuilder DVD.
- Chapter 2 helps you installing the server in a rack assembly and in an appropriate place, making connections and starting using your server.
- Chapter 3 shows you how to configure your server and helps you set up the options.
- Chapter 4 provides the information to remove components from your server and install new ones. You will find in this chapter how to install hard disk drives, upgrade memory, install optical devices... etc.
- Chapter 5 gives you information about how to solve the issues you may encounter with your server. This chapter contains information about the status indicators of your server.

Related Documents

In addition to this User Guide, several other documents are included with your system either as electronic files (on the ExpressBuilder DVD) or as paper copy shipped with your server.

We recommend you read these additional documents as it becomes necessary when setting up, using or upgrading your server system.

Care and Handling

Use the following guidelines to properly handle and care for your server.

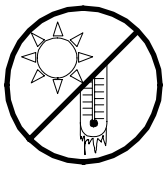

Protect the server from extremely low or high temperatures. Let the server warm (or cool) to room temperature before using it.

Keep the server away from magnetic forces.

Keep the server dry. Do not wash the system with a wet cloth or pour fluid into it.

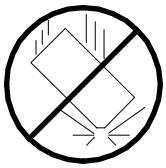

Protect the server from being bumped or dropped.

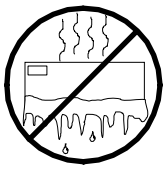

Check the server for condensation. If condensation exists, allow it to evaporate before powering on the server.

Keep the server away from dust, sand, and dirt.

System Overview

The Bull NovaScale R440 E1 server is a modular, multiprocessing server based on the Intel® Xeon™ microprocessor. It is a solid performer and offers the latest technology. The combination of compute performance, memory capacity, and integrated I/O provides a high performance environment for many server market applications. These range from large corporations supporting remote offices to small companies looking to obtain basic connectivity capability such as file and print services, e-mail, web access, web site server, etc.

The Bull NovaScale R440 E1 server is housed and available as a rack-mount system. Your server conveniently installs into a standard EIA 19-inch rack assembly.

Your server includes a DVD-ROM drive and drive bays for either 3 SAS / SATA (3.5”) disks or 6 SAS (2.5”) disks. The hot-swap hard disk drive bays can be swapped in or out of the server without powering it down, if the RAID functionality is configured in the server.

As application requirements increase, you can expand your server with an additional processor, additional memory, add-in boards and peripheral devices: tape devices, optical devices, and hard disk drives.

.

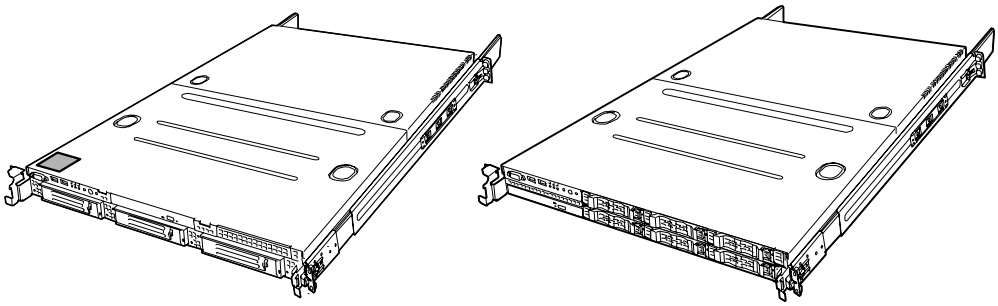

Figure 1: Bull NovaScale R440 E1

Server Chassis

External View

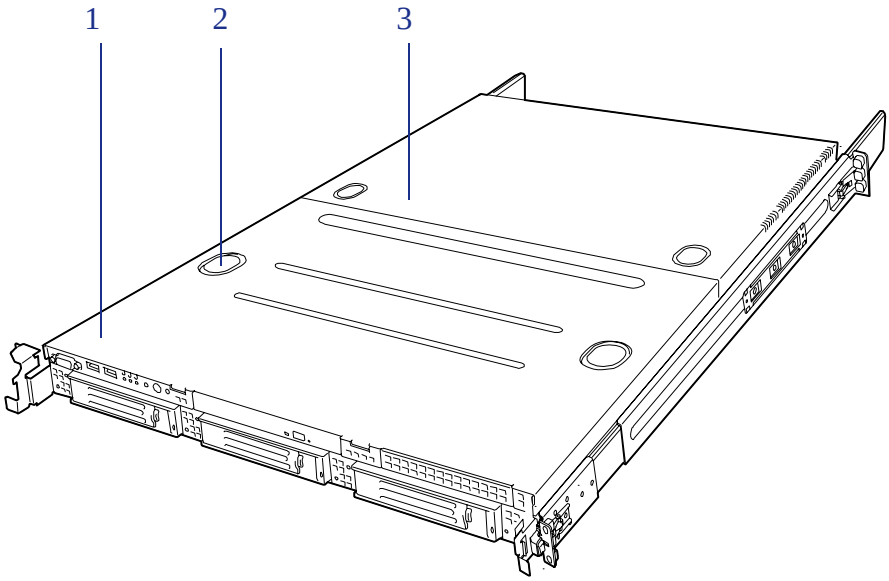

Figure 2: External View

1	Drive cover
2	Release button
3	Logic cover

Front View with Front Bezel Closed

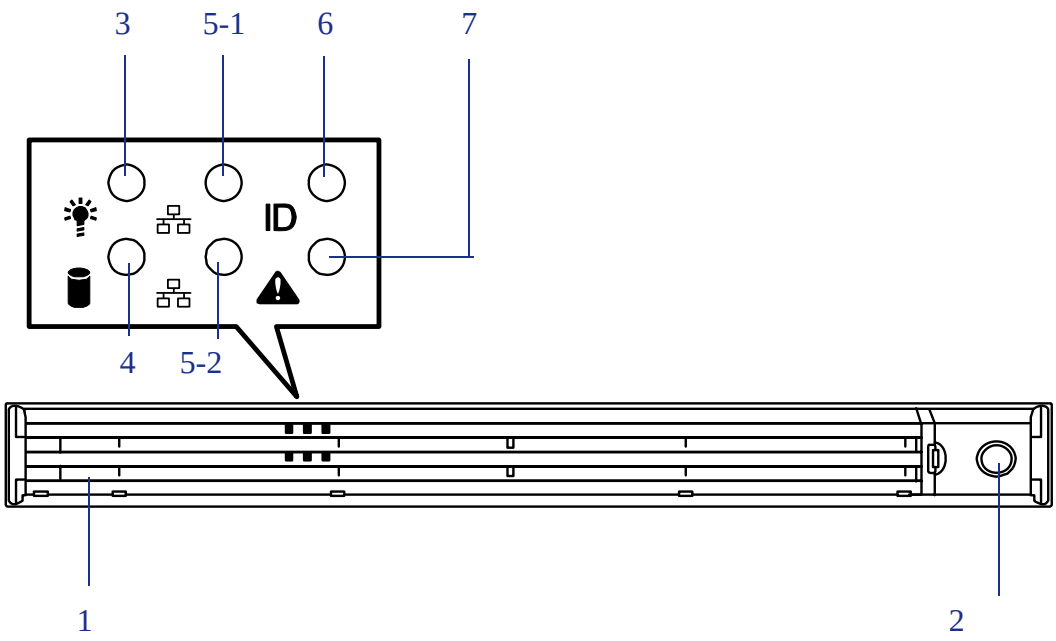

Figure 3: Front View with Front Bezel Closed

1 Front bezel

The front bezel is a cover protecting the front devices during daily operation.
A security key is provided to lock the cover.

2 Key slot

Insert the security key into this slot when unlocking the front bezel.

3 Power lamp (green)

This lamp turns green when the power is turned on.

4 Disk access lamp (green/amber)

This lamp is green during access to the internal hard disks.
The lamp turns amber when even one of the internal hard disks fails.

5 ACT lamp (green)

This lamp lights while the server is connected to the network.
5-1 is for LAN port 1 and 5-2 is for LAN port 2.

6 UID lamp (blue)

This lamp goes on when the UID switch is pressed.
The lamp also goes on or flashes when software issues a command.

7 Status lamp (green/amber)

This lamp indicates the server status.
The lamp is green during normal operation.
The lamp turns amber or flashes when the server enters the abnormal state.

Front View with Front Bezel Removed

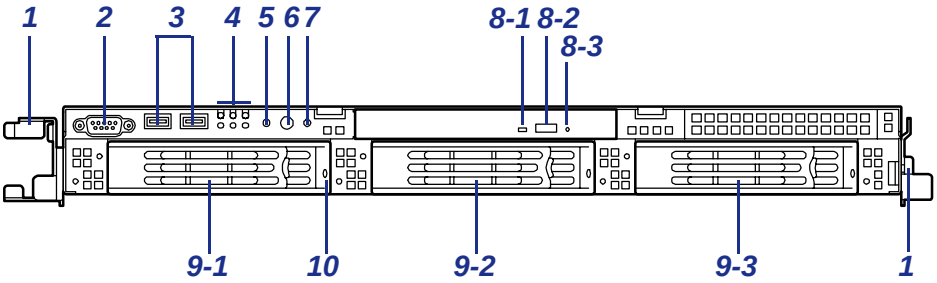

Figure 4: 3,5” model (SATA or SAS)

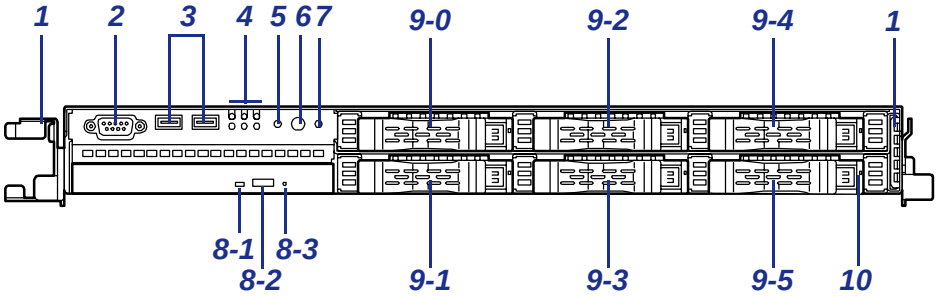

Figure 5: 2,5” model (SAS)

1 **Handle (1 at the right and left each)**

Hold the handles when dismounting/mounting the server from/in the rack.

2 **Serial port B (COM B) connector**

Connect a personal computer having a serial interface to this management port.

3 **USB connectors (2 ports)**

Connect device compliant with the USB interface to the connectors.

4 **Status indicators**

See Figure 3.

5 **Dump (NMI) switch**

Press this switch to dump server memory.

6 **Power switch**

Press this switch to turn on/off the power.
Pressing the switch once turns on the power: The power lamp lights.
Pressing it again to turn off the power.
Pressing the switch for more than 4 seconds forcibly turns off the power.

7 **UID (Unit ID) switch**

Press this switch to turn on/off the UID lamps on the front and rear panels of the server.
Pressing the switch once turns on the lamps.
Pressing it again turns them off.
(The LED also goes on or flashes when the software issues a command.)

8 **Optical device drive**

8-1 Disk access lamp 8-2 Tray eject button 8-3 Emergency hole

9 **Hard disk bays**

Mount hard disks in the bays.
In the standard configuration, hard disk drive trays are mounted in all the bays.

10 Hard disk lamp (green/amber)

Each hard disk lamp is green during access to the hard disk.
The lamp turns amber when the hard disk fails.
The lamp flashes switching back and forth between green and amber during build processing (in a RAID system).

Rear View

Non-redundant power supply model

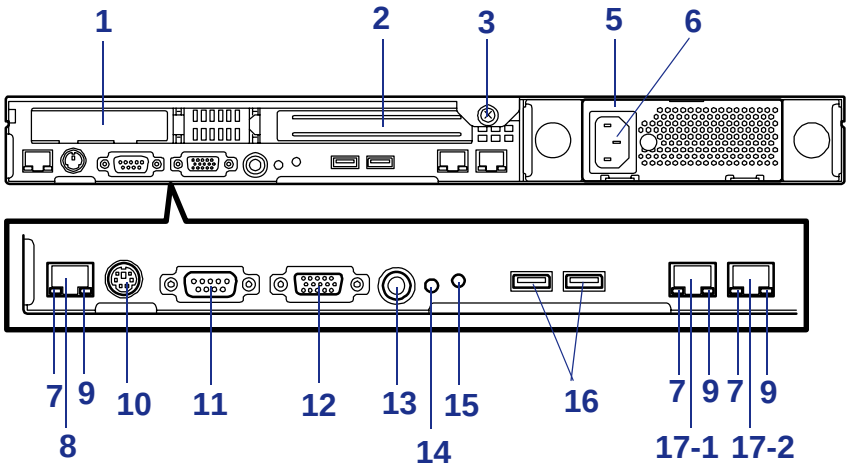

Redundant power supply model

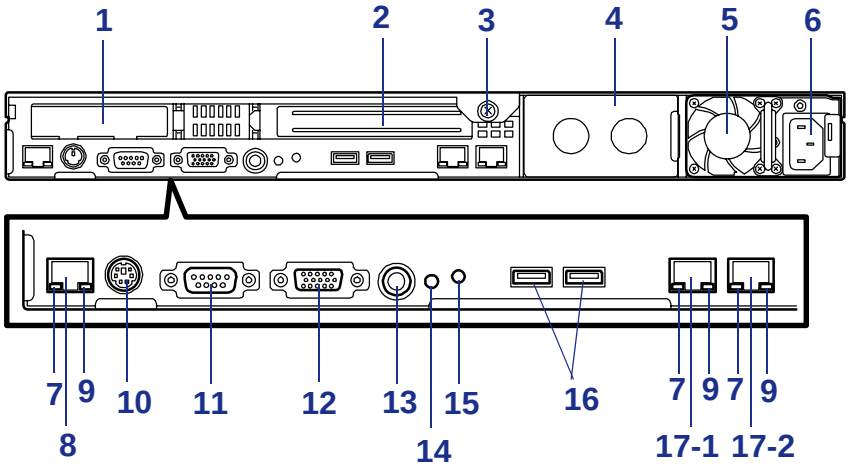

Figure 6: Rear View

1 Low-profile PCI board extension slot (1C)

Mount PCI board of the low-profile type into this slot.

2 Full-height PCI board extension slots (1B)

Mount PCI board of the full-height type in the slot.

The slot "1B" of 2.5-inch disk model contains the factory-installed RAID controller (RAID controller SAS/SATA HW RAID0/1 or equivalent).

3 Captive thumbscrew

Secures the logic cover to the chassis.

4 Redundant power supply slot

Hot-swap SAS hard disk drive model only
An optional slot for 1+1 redundant power configuration.

Equipped on redundant power supply model only.

5 Power supply

Supplies DC power to the server.

6 AC inlet

Connect the power cord to this socket.

6 Redundant power supply slot

An optional slot for 1+1 redundant power configuration.

7 LINK/ACT lamp (green)

This lamp indicates the access status of the LAN.

8 Management LAN port

100BASE-TX/10BASE-T interface port used to manage the server via LAN.

9 Speed lamp (amber)

This lamp indicates the transmission speed of the LAN.

10 Mouse/keyboard connectors

Connect the mouse and keyboard to the connectors through the provided relay cables.

11 Serial port A (COM A) connector

Connect device having a serial interface to this connector.
A leased line cannot be connected to this connector.

12 Monitor connector

Connect the display unit to this connector.

13 UID switch

Press this switch to turn on/off the UID lamps on the front and rear panels of the server.
Pressing the switch once turns on the lamps.
Pressing it again turns them off.

14 DUMP (NMI) switch

Press this switch to dump system memory.

15 UID lamp (blue)

This lamp goes on when the UID switch is pressed or when a software issues such a command.

16 USB connector

Connect device compliant with the USB interface to this connector.

17 LAN connectors

Connect network systems on the LAN to the connectors.The number "1" following the bold-faced number indicates LAN port 1, and the number "2" indicates LAN port 2.

RJ45 Leds

Refer to *"LAN Connector Lamps" on page 251* for more information.

Identification of Servers ~ UID Switch ~

An "UID (Unit ID) LED" is provided on the front panel and rear panel. If more than one server is mounted in a single rack, the LED identifies the server you are going to maintain.

The UID LED (A) goes on when the UID (Unit ID) switch (B) on the front panel is pressed. It goes off when the switch is pressed again.

Maintenance from the rear of the rack has to be carried out in a dark, narrow space. The interface cable of a server or power supply unit in normal state may be disconnected by accident in this situation. To prevent this problem, you should start maintenance after confirming the target server by using the UID switch.

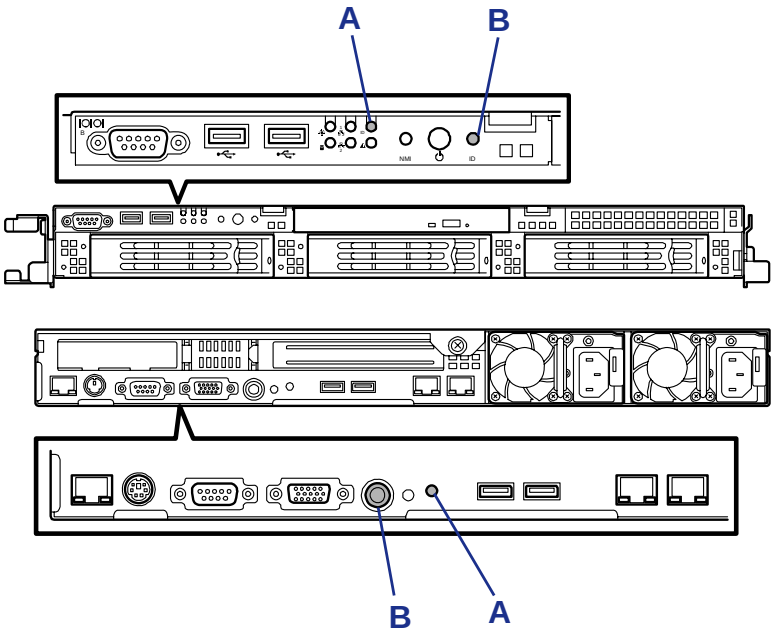

Internal View
(3.5-inch Disk with Non-redundant Power Supply Model)

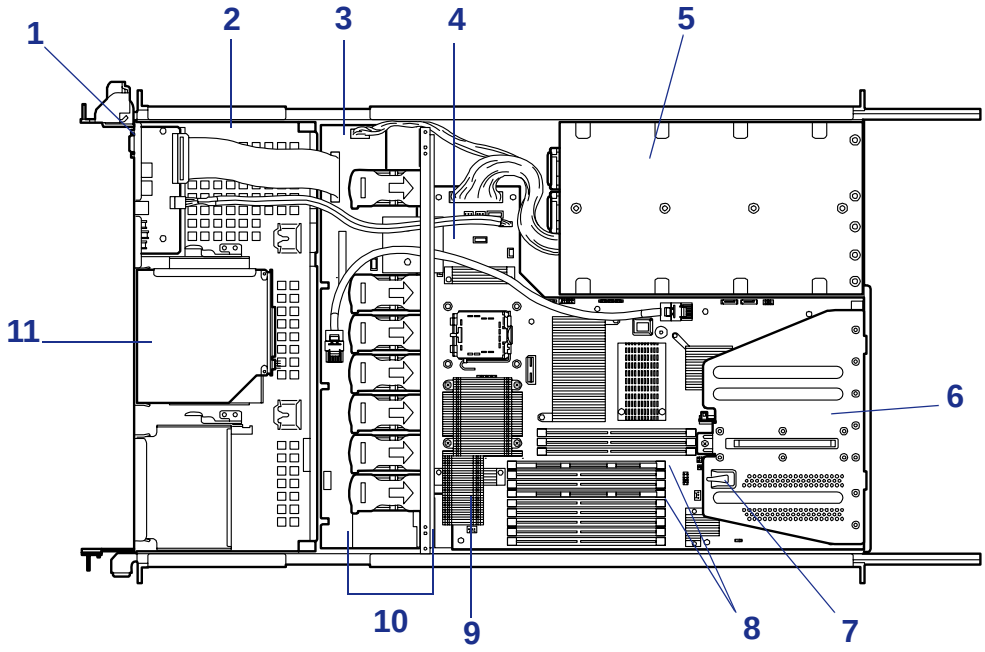

Figure 7: Internal View

1	Front panel board
2	Hard disk drive bays
3	Backplane
4	Motherboard
5	Power supply
6	Riser card module assembly
7	Chassis intrusion switch
8	DIMMs
9	Processor (mounted under the CPU and heatsink)
10	Cooling fans
11	Optical disc drive

Internal View
(3.5-inch Disk with Redundant Power Supply Model)

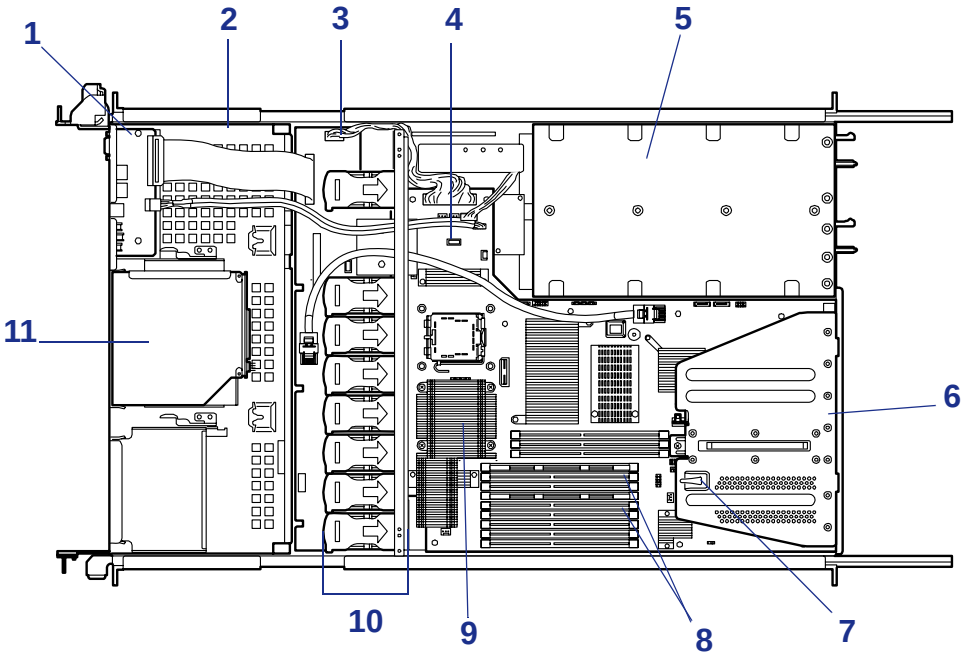

Figure 8: Internal View

1	Front panel board
2	Hard disk drive bays
3	Backplane
4	Motherboard
5	Power supply
6	Riser card module assembly
7	Chassis intrusion switch
8	DIMMs
9	Processor (mounted under the CPU and heatsink)
10	Cooling fans
11	Optical Disc drive

Internal View (2.5-inch Disk Model)

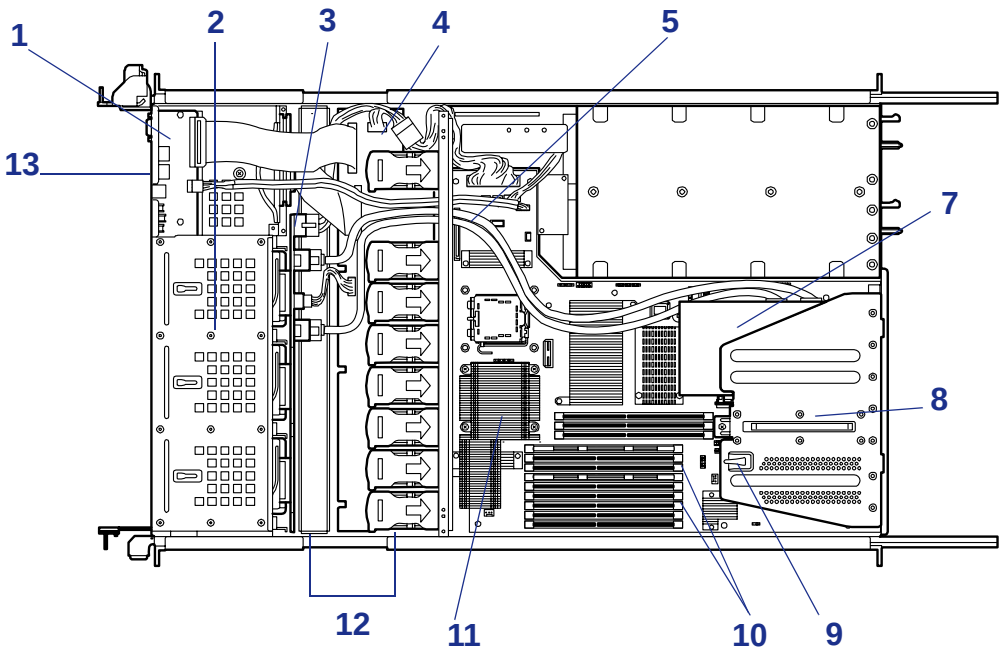

Figure 9: Internal View

1	Front panel board
2	Hard disk drive bays
3	Backplane
4	Middle plane
5	Motherboard
6	Power supply
7	RAID board
8	RAID controller is factory-installed in slot “1B”
9	Top cover sensor
10	DIMMs
11	Processor (mounted under the CPU and heatsink)
12	Cooling fans
13	Optical Disc drive

System board Features

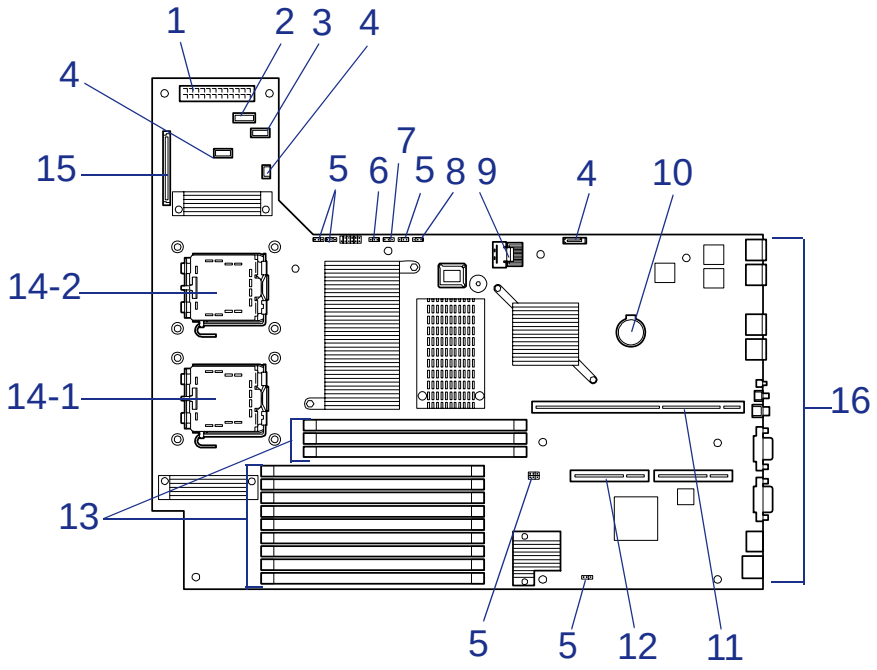

Figure 10: Motherboard

1 **Power connector**

2 **Power signal connector**

3 **USB connector**

4 **Unused connector**

5 **Unused jumper switch**

6 **RAID configuration jumper switch**

With the 2,5-inch disk model, leave the factory setting as is.

7 **Password Clear jumper switch**

8 **CMOS Clear jumper switch**

9 **Connector for SATA2 backup device**

10 **Lithium battery**

11 **PCI Riser Card Connector slot (for full-height board)**

12 **PCI Riser Card Connector slot (for low-height board)**

13 **DIMM sockets (for the interleave type)**

The sockets are called #41, #42, #43; #11, #12, #13, #21, #22, #23, #31, #32, #33 sequentially from top.

14 **Processor sockets**

#14-1: processor 1

#14-2: processor 2

15 **Backplane collector**

Remote Management Feature

Server management is concentrated in the ExpressScope. The ExpressScope and associated circuitry are powered from a 5V DC standby voltage, which remains active when system power is switched off, but the ac power source is still on and connected.

The ExpressScope supports Dianascope, which allows remote server management through the network. Events monitored by the manager system include over-temperature and over-voltage conditions, fan failure, or chassis intrusion.

Information on Dianascope may be found in the ExpressBuilder DVD-ROM.

One major function of the ExpressScope is to autonomously monitor system management events, and log their occurrence in the nonvolatile System Event Log (SEL). The events being monitored include overtemperature and overvoltage conditions, fan failure, or chassis intrusion. To enable accurate monitoring, the ExpressScope maintains the nonvolatile Sensor Data Records (SDRs), from which sensor information can be retrieved. The ExpressScope provides an ISA host interface to SCR sensor information, so that software running on the server can poll and retrieve the server's current status.

The ExpressScope performs the following:

- Monitors server board temperature and voltage*
- Monitors processor presence and controls Fault Resilient Boot (FRB)
- Detects and indicates baseboard fan failure*
- Manages the SEL interface
- Manages the SDR Repository interface
- Monitors the SDR/SEL timestamp clock
- Monitors the system management watchdog timer
- Monitors the periodic SMI timer
- Monitors the event receiver
- Controls secure mode, including video blanking, diskette write-protect monitoring, and front panel lock/unlock initiation
- Controls Wake On LAN via Magic Packet support.
- Monitors the hard disk drives.

* NEC ESMPRO also supports these features.

Note: *To use the Remote Management Extended License, contact your sales representative to see the latest information about remote console/remote media feature.*

Degradation Feature

The degradation feature automatically isolates a failed DIMM or processor to assure continuous operation of the server when the POST (Power On Self-Test, self-diagnosis program after power on) detects such a DIMM or processor.

> **Note:** *The degradation feature is only available when at least two DIMMs or processors are installed.*

Failed DIMMs and processors may be identified on the screen that the POST displays, or with the BIOS setup utility of the server, "SETUP." They may also be identified on the system that has the NEC ESMPRO installed.

Memory RAS Features

Your server board has memory mirroring and online spare memory features. For more information see *"Using the Memory RAS Features" on page 183*.

Remote Power-On Feature (Wake On LAN)

The remote power-on function turns on the server through a network. It sends a special packet from the management computer to a remote server to turn it on if the server is off-powered.

To enable this feature, use the BIOS setup utility, "SETUP." (See *"BIOS Setup Utility" on page 63*.)

The remote power-on feature is not available in the following cases. Press the POWER switch once to start the OS, and turn off the server in an appropriate procedure.

- Abnormal previous system shut-down
- No power supply to the server (due to turned-off breaker, disconnected power cord, power blackout, etc.)

AC-Link Feature

When the power cord of the server is connected to an uninterruptible power supply (UPS) unit, the server supports the power linkage feature that enables control over the power supply from the UPS to the server. The AC-Link feature can be enabled or disabled with the Server menu of the BIOS setup utility, "SETUP." (See *"BIOS Setup Utility" on page 63*.)

Standard Features

High performance

- Intel® Xeon® Processor
- High-speed network interface (1000 Mbps/100 Mbps/10 Mbps supported)
- High-speed disk access: SATAII 300 or Serial Attached SCSI (2.5-inch disk model server supports SAS hard disk drive only)

Expandability

- PCI Express (x8): 1 slot (low profile)
  PCI Express (x8): 1 slot (full height)
  (With 2.5-inch disk model, the factory-installed RAID controller occupies the slot.)
- Large memory up to 48GB.
- Up to two multi-processors are available for upgrade.
- Three network ports (one for management LAN)
- Hard disk drive bays
  3.5-inch disk model: up to 3 HDDs
  2.5-inch disk model: up to 6 HDDs
- USB2.0 interface

Management utilities

- NEC ESMPRO
- NEC DianaScope
- RAID System Management Utility
- Power monitoring feature
- Hard disk drive monitoring feature

Maintenance Features

- Off-line Maintenance Utility
- Memory dump feature using the DUMP switch

High reliability

- Memory monitoring feature (error correction/error detection)
- CPU/memory degradation feature (logical isolation of a failed device)
- Memory x4/x8 SDDC feature
- Memory mirroring/online spare memory feature
- Bus parity error detection
- Temperature detection
- Error notification
- Internal fan monitoring feature
- Internal voltage monitoring feature
- Redundant power supply (hot-swap) on the corresponding model only
- Onboard RAID Controller (LSI Embedded MegaRAID) / Internal RAID Controller
- Auto-rebuild feature (hot-swappable)
- BIOS password feature
- Mechanical security lock
- Redundant fans

Many available features

- Redundant power supply (hot-swap) with optional power supply unit on the Redundant power supply model only
- El Torito Bootable CD-ROM (no emulation mode) format support
- POWER switch mask
- Software power-off
- Remote power-on feature
- AC-Link feature
- Remote Console feature

Self-diagnosis

- Power On Self-Test (POST)
- Test and Diagnosis (T&D)

Easy Setup

- ExpressBuilder (system setup utility)
- Parameter File Creator
- SETUP (BIOS setup utility)

Server Security

To help prevent unauthorized entry or use of the server, the server includes a full lockable front bezel and Server Management software that monitors the front bezel intrusion switch.

Security with Mechanical Locks and Monitoring

To unlock the bezel, insert the key in the lock and turn the lock counterclockwise until it stops (about a quarter turn).
The bezel is unlocked and can be opened again.

To lock the bezel, insert the key in the lock. Turn the lock clockwise until it stops (about a quarter turn).
The bezel is locked and cannot be opened.

Software Locks via the BIOS Setup Utility

The BIOS Setup Utility provides security features to prevent unauthorized or accidental access to the system. Once the security measures are enabled, you can access the system only after you enter the correct password(s). For example:

- Mask the power switch function after the power-on.
- Set and enable a supervisor password.
- Set and enable a user password.
- Disable access to the boot sector of the operating system hard disk drive.

Using Passwords

You can set either the user password, the supervisor password, or both passwords. If only the user password is set, you:

- Must enter the user password to enter BIOS Setup.
- Must enter the user password to boot the server if Password on Boot is enabled in the BIOS Setup.
- Must enter the user password to exit secure mode.

If only the supervisor password is set, you:

- Must enter the supervisor password to enter BIOS Setup.
- Must enter the supervisor password to boot the server if Password on Boot is enabled in the BIOS Setup.
- Must enter the supervisor password to exit secure mode.

If both passwords are set, you:

- May enter the user password to enter BIOS Setup. However, you will not be able to change many of the options.
- Must enter the supervisor password if you want to enter BIOS Setup and have access to all of the options.
- May enter either password to boot the server if Password on Boot is enabled in either the BIOS Setup.
- May enter either password to exit secure mode.

ExpressBuilder DVD

Please setup the server using the ExpressBuilder DVD both when setting it up for the first time, and when you make changes to its configuration.

With the ExpressBuilder DVD you can:

- Install the Operating System, using the Express Setup.
- Diagnose the system, using the System Diagnostics tool.
- Create a support disk; this disk will be used to manually install a Microsoft operating system.
- Update the BIOS or the server firmware.
- Update a Microsoft operating system, using the "Update System" feature of the Windows Autorun menu (available from the windows-based ExpressBuilder).
- Install utilities, such as management software for Windows (NEC ESMPRO, Dianascope, etc.). Windows-based applications are installed via the Windows Autorun menu.
- Read the on-line documentation (Windows systems only).

***Note**: Some of the above features can be performed remotely using a cross cable (COM) or LAN.*

Software End-User License Agreement

Carefully read the terms and conditions of the Software End User License Agreement printed on the ExpressBuilder DVD-ROM sleeve.

Using a Client Computer equipped with a CD Drive

The ExpressBuilder disk is a DVD, which means that the client computer you want to use to manage the server needs a DVD drive.

If you want to install the ExpressBuilder management software to the client without a DVD drive, make a CD-R from the ExpressBuilder DVD according to the procedure below.

***Note**:The sole purpose of this procedure is the creation of CD to install the management software to the client.*

1. Insert the ExpressBuilder DVD in a computer equipped with a DVD drive.

2. Close the Autorun menu if it is displayed.
3. Copy the below files of ExpressBuilder to a hard disk using the Explorer.

```
\(root folder)
    |
    \002 : copy version.xml
    |
    |---\ar_menu : copy this sub-folder
    |
    |---\doc : copy this sub-folder
    |
    |---\win : copy this sub-folder
```

4. Delete the **ar_menu\autorun_menu.xml** on the hard disk, and rename the **ar_menu\autorun_en.xml** on the hard disk to **autorun_menu.xml**.
5. Copy the above files/folders to a CD-R.
   Match the root folder when you burn a CD-R.
6. Delete the files/folders that you copied during step 3.
7. Insert the CD-R in the client computer on which you want to install the management software.
8. Kick the below file of the CD-R by using Explorer.
   \002\ar_menu\autorun_menu.exe (for Windows 32 bit edition)
   autorun_menu_x64.exe (for Windows 64 bit edition)

Setting Up the Server

Overview

This chapter describes how to:

- select a site,
- unpack the server,
- install the server into a standard EIA 19-inch rack cabinet,
- make cable connections,
- power on/off the server.

Selecting a Site

To use the server, install it on a standard EIA 19-inch rack assembly (*See "Installing the Server into a Rack" on page 42.*).

The rack has to be installed in a site that is:

- Near grounded, three-pronged power outlets.

> ***Note**: For the United States and Canada, this means a NEMA 6-15R outlet for 200-240 VAC. The server cannot be used on a NEMA 5-15R outlet for 100-120 VAC. For other international sites, this means three-pronged power outlets applicable for the electrical code of the region.*

Warning

Be sure the power service connection is through a properly grounded outlet.

- Clean, dust-free, and well ventilated. Every side ventilating openings kept free of obstructions. Away from sources of heat, vibration or physical shock.
- Isolated from strong electromagnetic fields and electrical noise produced by electrical devices (such as air conditioners, large fans, large electric motors, radio and TV transmitters, and high-frequency security devices)
- Spacious enough around the server to allow proper cooling, airflow, and cable clearance.

Caution

Leave enough space behind the server. Not doing so may result in overheating and damaging the server.

- Easily accessible for server maintenance and installation of server upgrades.

Unpacking the Server

When you receive your server, inspect the shipping containers prior to unpacking. If the shipping boxes are damaged, note the damage, and if possible, photograph it for reference. After removing the contents of the containers, keep the cartons and the packing materials. If the contents appear damaged when you unpack the boxes, file a damage claim with the carrier immediately.

Installing the Server into a Rack

This section provides the instructions to install the server into a standard EIA 19-inch rack cabinet.

Before Installation

Warning

- Do not use any rack which does not conform to the relevant standard.
- Disconnect the power cord(s) before installing or removing the server.
- Do not install the server on the rack leaving the cover removed.
- Do not pinch your finger with mechanical components.

Restricted Access Location

The server is intended for installation in a Restricted Access Location, mounted above a non-combustible material.

Static Precautions

An electrostatic discharge (ESD) can damage disk drives, option boards, and other components. You can provide some ESD protection by wearing an antistatic wrist strap attached to chassis ground when handling server components.

Electronic devices can be easily damaged by static electricity. To prevent damage, keep them in their protective packaging when they are not installed in your server.

Checking Components

Check that you have the components to install the server on the rack (screws, core nuts, sliding rails).

Required Tools

Phillips screwdriver.

Installing the Server

This server can be installed in either an NEC rack or a third vendor's rack. Take the following steps to install the server in the rack.

Preparing before Installation

The left and right slide rails are fixed with tapes at the front and side faces to prevent from falling off during transportation. Peel off the tape before you install the server in the rack.

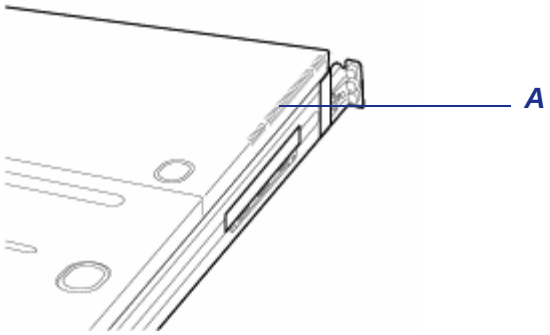

Figure 11: Peeling off the Tape

A: Tape

Removing the Rail Assemblies

1. Remove the sliding rails from the server.

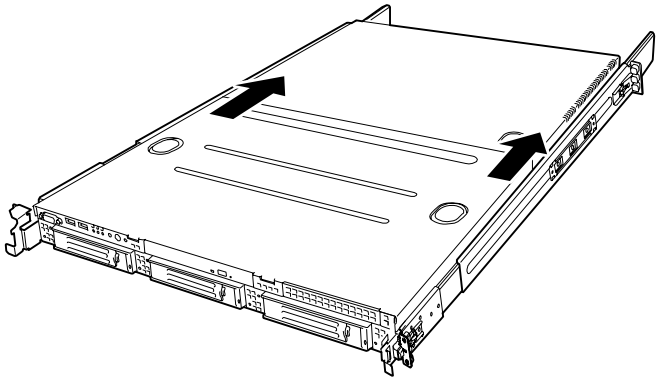

Figure 12: Removing the Sliding Rails

2. Push the unlock button on the front of the server, hold the rails and slowly move them toward the rear of the server.

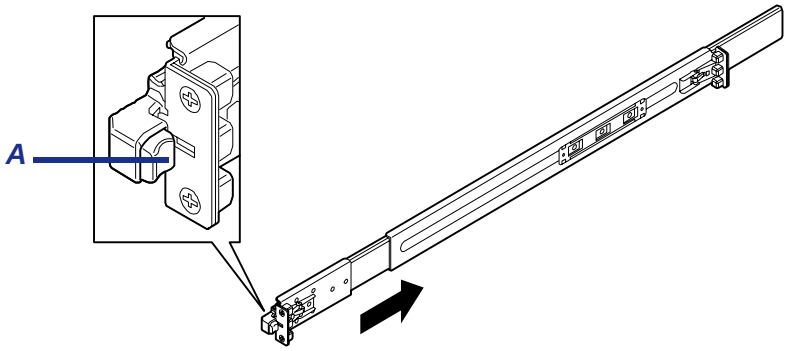

Figure 13: Sliding the Rails to the rear of the Server

A: Unlock button

3. The rails lock with a clicking sound. Pull the release levers on the left and right sides of the server toward direction indicated by an arrow (white) in the figure, and remove them from the server while unlocking it.

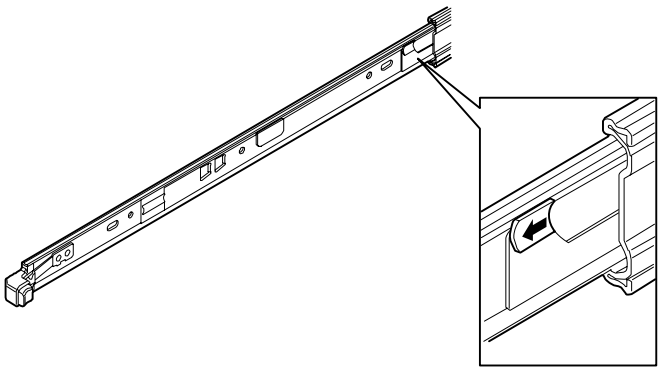

Figure 14: Removing the Rails

Pull the release lever toward the direction shown by the arrow (white) to remove the rail.

4. Only the inner rails remain screwed to the server when the rail assemblies have been removed.

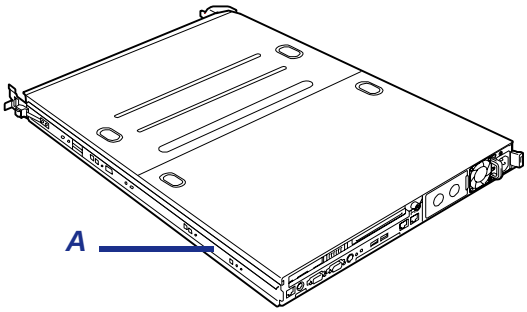

Figure 15: Inner Rails on the Server

A: Inner rails

5. Push the levers, and move the removed rail assemblies toward the direction indicated by an arrow in the figure, to restore the original position.

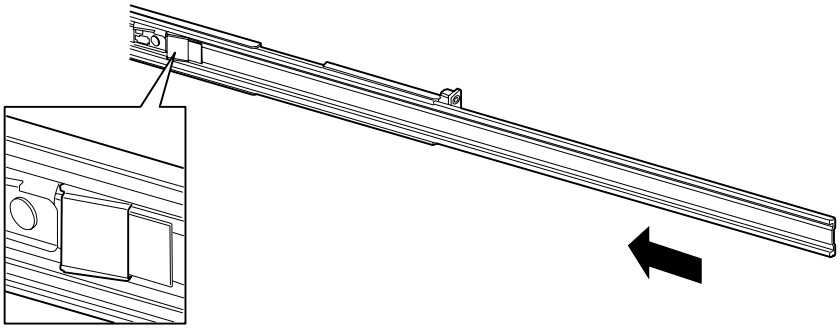

Figure 16: Folding the Rail Assemblies

⚠ Caution

- The removed rail assemblies are to be installed on the inner rails later.
- Do not catch your fingers in the levers or rails.

Installing the rail assemblies

1. Insert the square projection of the rail assembly into the angle hole on the 19-inch rack until it is locks into place.

   The figure below shows the right side (front) of the rack. Install the rail assemblies to the right side (rear), and left side (front and rear) of the rack in the same procedure.

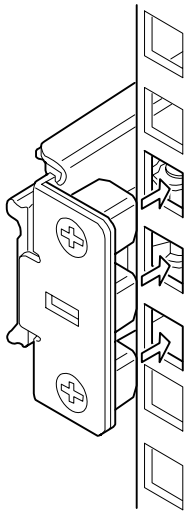

Figure 17: Installing the Rail Assembly (Right Side Shown)

Make sure that the rail assembly is installed at the same level as the other slide rail assembly already installed.

***Note**: There may be some backlashes in the front and rear, however, it is not a deficiency.*

2. Make sure that the rail assembly is surely locked to the rack.

Installing the Server

1. Pull out the sliding rails of the right and left rail assemblies until they lock.

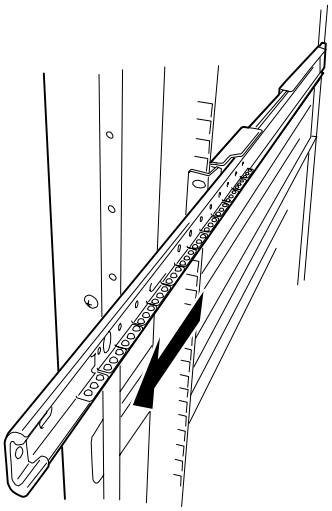

Figure 18: Pulling Out the Sliding Rail

***Note**: Make sure that the sliding rails are surely locked by the stopper.*

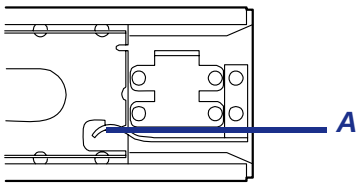

A: Stopper

2. At least two persons are required to install the server. Securely hold the server and install it in the rack.
3. Firmly fit the inner rails (on the sides of the server) into the rail assemblies that are installed on the rack, and then slowly push the server into the rack.

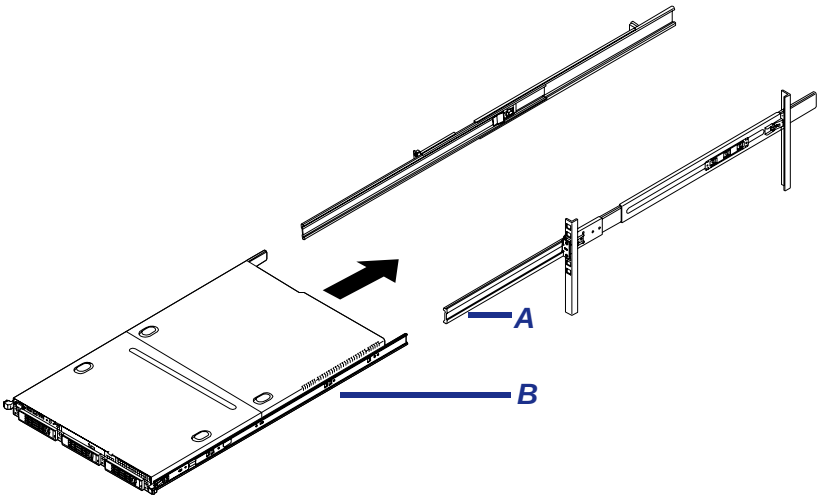

Figure 19: Pushing the Server into the Rack

A: Rail assembly
B: Inner rail at server side

4. When the server is locked on its way into the rack, press the release levers (blue) on the right and left sides of the server and slowly push it in.
5. The server locks again when the server is completely pushed into the rack.

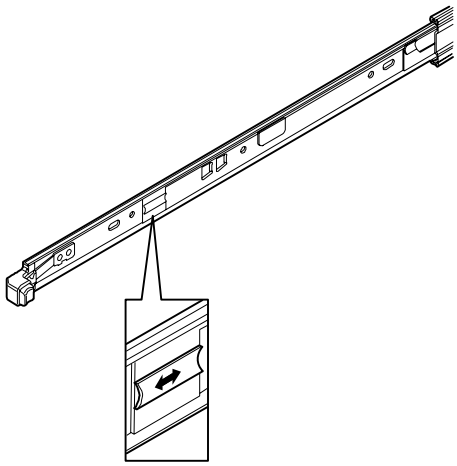

Figure 20: Pressing the Release Levers

⚠ Caution

- Do not catch your fingers in the levers or rails.
- Insert both inner rails straight into the rack.

- Hold the thumbscrews on both sides of the server, and install the server carefully while making sure of the installation position.

***Note**: During the first installation, you may feel strong friction when pushing because the mechanical components cannot completely engage with each other. Push the server firmly.*

6. Make sure that the sliding rails move smoothly by pulling the server out of the rack and pushing it in several times.

***Notes**:*

- *To install the server in the location adjacent to the other device, pay attention to interference. If the installing server disturbs the other devices already been installed, adjust the position, and install the rail assembly again.*
- *Make sure that the sliding rails move smoothly. If the sliding rails are stuck to the rack frame and do not come out, reinstall them.*

Installing the front bezel

1. Install the front bezel so that the left tab on the front bezel engages with the chassis frame.

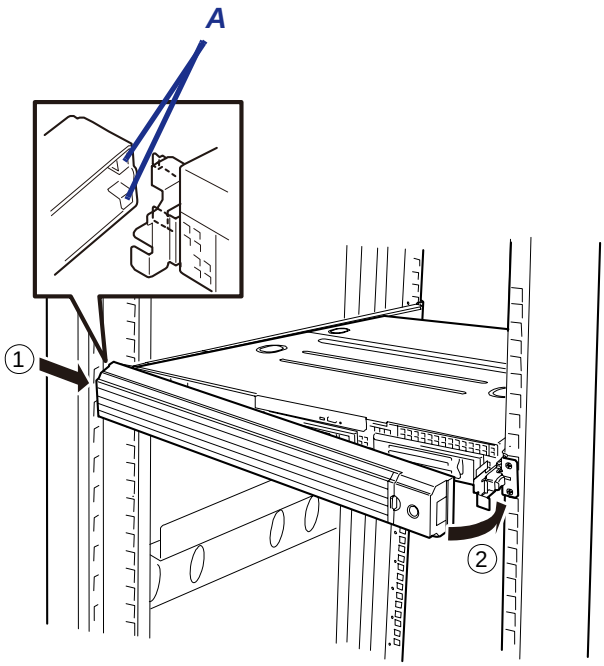

Figure 21: Installing the Front Bezel

A: Tabs

Removal

Remove the server from the rack as described in the following procedure.

1. Make sure that the server is powered off, and disconnect the power cords and all the interface cables from the server.
2. Unlock the front bezel with the security key.

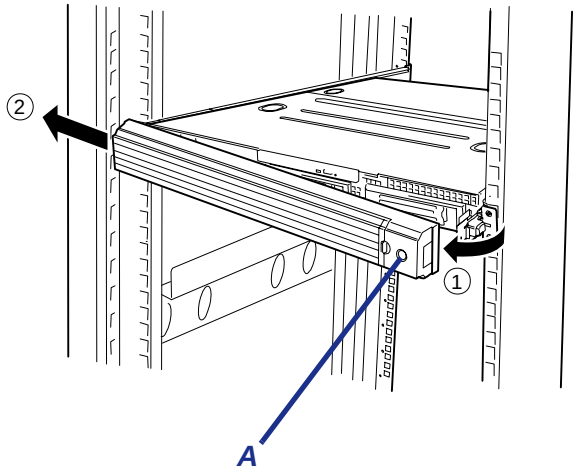

Figure 22: Unlocking the Front Bezel

A: Security Key Hole

3. <This step is required only when the optional cable arm is mounted.>
   Remove the cable arm from the server.
4. Push the left and the right unlock buttons on the front of the server, and pull out the server from the rack slowly and carefully. The server clicks to unlatch.

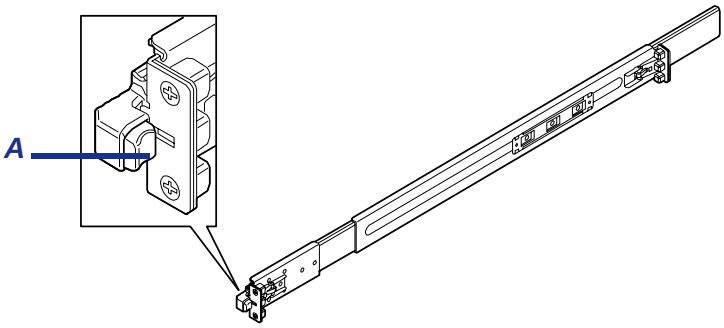

Figure 23: Pushing the Unlock Button

A: Unlock button

5. Push the right and left release levers (blue) forward or rearward to unlock, and slowly pull out the server from the rack.

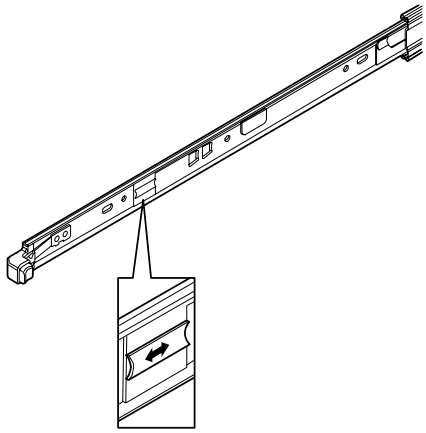

Figure 24: Pushing the Release Levers

⚠ Caution

Do not apply any load on the server when it is pulled out from the rack. Personal injuries may occur if the server falls.

6. Firmly hold the server, and take it out from the rack.

⚠ Caution

- Pull out the server slowly holding the bottom of the server by at least two persons.
- Do not catch your fingers in the levers or rails.

7. To remove the rail assembly, pull out the rail toward you while pressing on the lever.

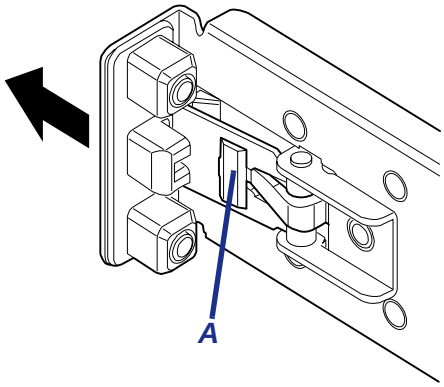

Figure 25: Pressing the Lever

A: Release lever

Making Connections

Connect your keyboard, monitor, and mouse. Also connect any external peripheral devices by following the instructions included with these devices.

⚠ Caution

- Power off the server and a peripheral device before connection. Connecting a powered peripheral device to the powered server will cause malfunctions and failures.
- Inserting a telephone line connector into a LAN RJ-45 port may result in personal injury and equipment damage
- To connect a third-party peripheral device or interface cable to the server, consult with your sales agent for availability of such a device or cable. Some third-party devices may not be used for the server.
- A leased line cannot be connected directly to the serial port connectors.
- Secure the power cord(s) and interface cables with a tie wrap.
- Form the cables in such a way that they will not come into contact with the door or the guide rails on the sides of the server.

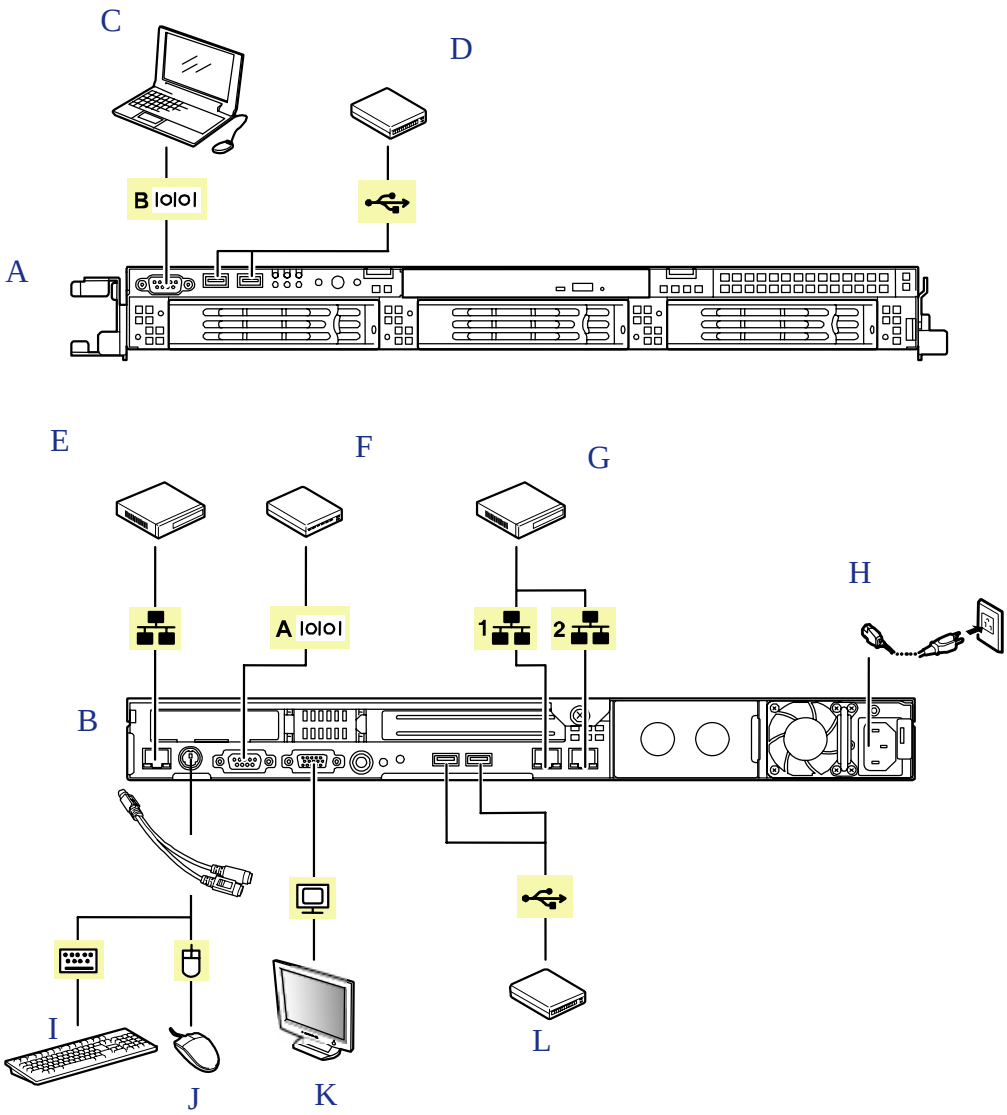

Figure 26: Connecting Peripheral Devices

A	Front
B	Rear
C	Device with the serial interface (e.g., Management PC) A leased line cannot be connected directly to this connector. The console of a management PC can be connected to only serial port 2. (BIOS setup required.)
D	USB device
E	Hub (multiport repeater)
F	Device with the serial interface
G	Device with the SCSI interface
H	Connect the provided power cord to the receptacle. Connect the power cord to a circuit breaker of 15 A or less. If connecting the server to UPS, see the explanation below.
I	Display unit
J	USB device

K	Keyboard
L	Mouse
1	100BASE-T/1000BASE-TX/10BASE-T
2	100BASE-T/1000BASE-TX/10BASE-T

Connecting the Power Cord

1. Plug the female end of the AC power cord into the input receptacle on the rear of the power supply cage.
2. Plug the male end of the power cord into NEMA 5-15R outlet for 100-120 VAC, or CEE7, or UK outlet for 200-240 VAC.

If the power cord(s) supplied with the server is not compatible with the AC wall outlet in your region, obtain a suitable power cord that meets the following criteria.:

- The power cord must be rated for the available AC voltage and have a current rating that is at least 125 % of the current rating of the system.
- The power cord connector that plugs into the wall outlet must be terminated in a grounding-type male plug designed for use in your region. It must have certification marks showing certification by an agency acceptable in your region.
- The power cord connector that plugs into the system must be an IEC- type CEE-22 female connector.

Warning

Your server shipped with a power cord for the power supply.

Do not attempt to modify or use the supplied AC power cord if it is not the exact type required.

Using the Server

The following sections describe how to use this server properly and safely, including an explanation of the server power on/off sequences, what the POST program checks in the server, and how to perform a forced power shutdown.

When using the server the following precautions should be observed:

- Make sure you power off the server before connecting or disconnecting cables between the server and peripheral devices. Connecting or disconnecting the cables while the server is powered on may cause malfunction or failures within the server.
- Verify that the access lamp on the diskette drive is unlit before turning off the server or ejecting the floppy disk. Turning off the server or ejecting the floppy disk while the access lamp is lit may damage data being stored on the floppy disk.
- After turning off the server, wait at least 30 seconds before turning it on again. Cycling the power immediately may cause malfunction or failures of the server.
- Before relocating the server, turn off the power and unplug the power cord from the outlet. Moving the server when it is powered may cause malfunction or failures of the server.
- Clean the server regularly. Regular cleaning prevents failures of the server and its components.
- Lightning may cause a momentary voltage drop. To prevent this problem, an uninterruptible power supply unit is recommended.
- Only use options qualified for the server. A non-qualified option may be mounted or connected to the server, but it may fail to operate normally or even cause failures. These types of failures are not covered under warranty.

Removing and Installing the Front Bezel

Remove the front bezel to power on/off the server, to access the optical device drive, and to install/remove hard disks to/from the 3.5-inch disk bays.

Removing the Front Bezel

1. Insert the attached security key into the key slot and turn the key to the front bezel side pressing it lightly.
   The front bezel is unlocked.

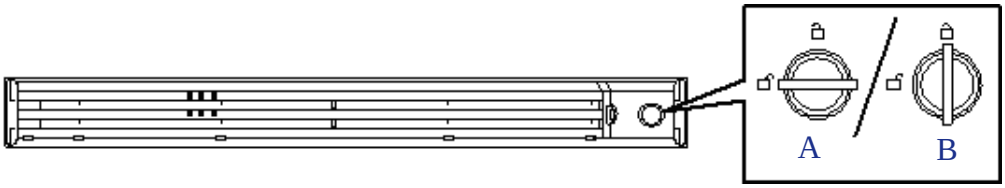

A - Unlocked B - Locked

Figure 27: Unlocking the Front Bezel

2. Hold the right end of the front bezel lightly and pull it toward you (*(1) on the figure below*).
3. To remove the tab from the frame, slide the front bezel to the left then remove the front bezel from the server (*2*).

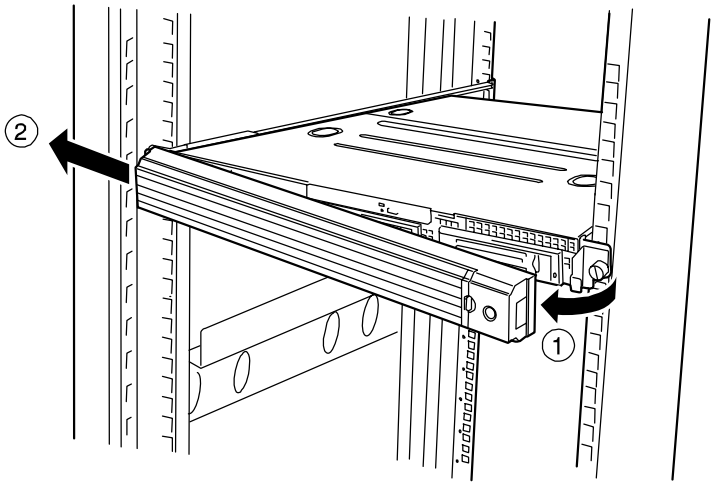

Figure 28: Removing the Front Bezel

Installing the Front Bezel

1. Latch the tab at the left side of the front bezel on the server frame (1) then pull the right end of the front bezel toward the server (2).

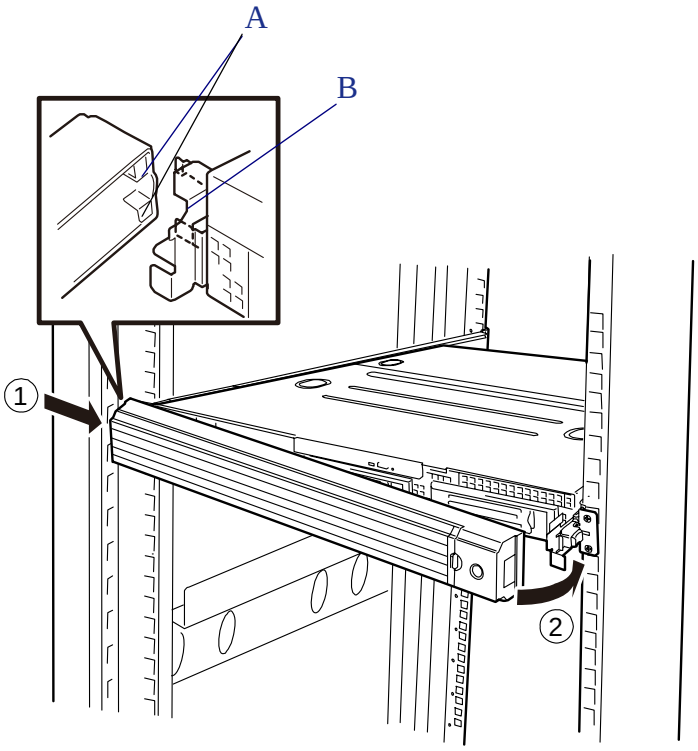

A - Tab B - Frame

Figure 29: Installing the Front Bezel

2. Lock the front bezel by using the key for security.

Powering On Your Server

⚠ Caution

If the power cord is connected to the server, an initial diagnosis of the hardware starts. The POWER switch does not work while in diagnosis.
Wait for about 30 seconds, then press the POWER switch.

To power on your server:

1. Make sure all external devices, such as a video display, keyboard, and mouse (optional) have been connected, and the power cords are connected.
2. Power on the video display and any other external device.

> ***Note**: If the server power cord(s) is connected to a power control unit such as an UPS (Uninterruptible Power Supply), make sure that the power control device is powered.*

3. Remove the front bezel (*See "Removing the Front Bezel" on page 56.*).
4. Press the POWER switch on the front of the server chassis.
   The POWER lamp lights green.

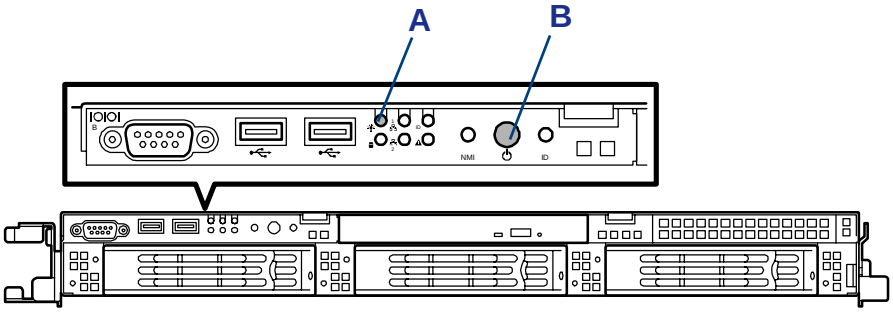

Figure 30: Power lamp and power switch

A: Power lamp
B: power switch

5. If the POWER lamp is not lit, ensure the ac power cord is connected to a functional ac power source.

After a few seconds your server begins the internal Power-On Self Tests (POST). POST checks the motherboard, CPU(s), memory, keyboard, mouse, and most installed peripheral devices. POST also displays the start messages of the BIOS setup utility during execution.

The POST check results should be checked in the following cases:

- When the server is being used for the first time.

- When the server appears to fail.
- When the server beeps many times between power-on and OS start-up.
- When an error message appears on the screen.

Note: *For error messages that appear on the display unit, see "Error Messages" on page 240.*

Caution

- Always allow POST to complete before powering down your server.
- The server management logic on your system board monitors and logs system voltage changes. When powering down your system you may experience a 1 to 5 seconds delay from the time you press the push-button power on/off switch on the front panel and your system powering down. This is normal system operation and is required by the server management logic.

If you have problems powering on your server, *see "Problem Solving" on page 210*.

After you have powered on your server, insert the ExpressBuilder DVD into the optical device drive and follow the screen prompts to run ExpressBuilder.

POST Execution Flow

The following describes the progress of POST in the chronological order.

Caution

- Do not make key entries or perform mouse operations while POST is in progress.
- Some system configurations may display the message "Press Any Key" to prompt a key entry. This message is driven by BIOS of an installed optional board. Make sure to read the manual that comes with the optional board before any key entry.
- Powering on the server, after you installed or removed an optional PCI board or moved it to another slot, may display the message that indicates incorrect board configuration and suspend POST.

In such a case, press **F1** to continue POST. Board configuration can be made using the utility described later.

1. After a few seconds from power-on, POST starts checking the memory. The count message of the basic and expansion memory appears at top left on the display unit screen. The memory check may takes a few minutes to complete depending on the memory size of the server. Also, it may take approximately one minute for the screen display to appear after rebooting the server.
2. Some messages appear upon completion of the memory check. These messages appear to indicate that the system has detected the CPU, baseboard management controller, keyboard, and mouse.
3. After a few seconds, POST displays the following message prompting you to launch the BIOS SETUP utility stored in the system memory of the server. This message appears at bottom left on the screen.

```
Press <F2> to enter SETUP, <F12> to Network
```

Launch the BIOS setup utility when you need to change the settings to meet the requirements for the server. As long as the above message is not displayed with an error message, you don't have to launch the utility. (Ignore the message. POST will automatically proceed.)

To launch the SETUP utility, press **F2** while the above message is displayed. See Chapter 4 for setup and parameters.

The server automatically restarts POST all over again when you exit the SETUP utility.

The message "<F12> to Network" prompts you network booting (PXE boot). If you press **F12**, the POST searches for boot device on network.

4. When 3.5-inch disk model server contains 3.5-inch SATA hard disk drive>

   If your server uses Onboard RAID Controller, the following message is displayed to prompt you to run RAID utility.

```
Press <Ctrl><M> to Run LSI SoftwareRAID Configuration Utility
```

Press **Ctrl** + **M** to run the utility. For detail explanation, see Chapter 4 for detail.

⚠ Caution

The LSI Software RAID Configuration Utility is used to manage the data stored in hard disk drive, or for maintenance. See Chapter 4 for detail. This feature is unavailable for 2.5-inch disk model.

5. If the POST detects the optional add-in card, it display the message prompting you to launch the add-in card BIOS configuration utility. (Ignore the message. POST will automatically proceed a few seconds later.)

   Refer to the manual that comes with the optional add-in card for detail.

6. If you set a password using the BIOS setup utility, SETUP, the password entry screen appears upon successful completion of POST.

   Up to three password entries will be accepted. Three incorrect password entries disable the server to boot. In such a case, turn off the power and wait about ten seconds before turning on to boot the server.

⚠ Caution

Do not set a password before installing an OS.

7. The OS starts when POST completes.

Powering Off Your Server

When the server power is on, to turn the server off press the power on/off switch on the front panel.

To power off your server:

1. Shutdown the operating system (OS).
2. If necessary, remove the front bezel then press the POWER switch on the front of the server to power off the server.
   The POWER lamp lights off.
3. Power off the peripheral devices.

Note: *If the server power cord is connected to a power control unit such as an UPS (Uninterruptible Power Supply), refer to the UPS user's guide for proper power-off procedures.*

Note: *The standby feature of Windows Server is not available. Do not select "Standby" in Windows shutdown menu.*

Forcing a Power Shutdown

A forced power shutdown can be used when the power on/off switch does not power off the server or the reset functions do not work.

To perform a forced power shutdown, press in on the POWER on/off switch located on the front panel of the server for at least 4 seconds.

To power on after a forced shutdown, wait 30 seconds and then power on again.

BIOS Setup Utility

The BIOS Setup Utility is used to change system configuration parameters. The utility is resident in the system FLASH memory and does not require a diskette or an operating system present to run.

Using the BIOS Setup Utility

You can access the BIOS Setup utility when you turn on or reboot your system.

> ***Note**: The server is factory-configured with the best parameters. Run the Setup utility only when it is required.*

To run the BIOS Setup Utility, perform the following procedure:

1. Power-on or reboot the system. “Press <F2> to enter SETUP” displays.
2. Press **F2**. The BIOS Setup Utility starts and the Main Menu is displayed. The menu bar at the top of the Main Menu lists the following selections:

Table 1: BIOS Setup Menus

Menu	Use
Main Menu	Use this menu for basic system configuration.
Advanced Menu	Use this menu for setting the Advanced Features available on your system.
Security Menu	Use this menu for setting passwords.
Server Menu	Use this menu to configure server specific options, the redirection console and to display server information.
Boot Menu	Use this menu to configure Boot Device priority.
Exit Menu	Exits the current menu.

Use the arrow keys to select a menu or an item on a displayed menu. Press the value keys (listed in the table below) to cycle through the allowable values for the selected field. Use the Exit menu’s “Save Values” selection to save the current values on all the menus.

To display a submenu, position the cursor on a selection that has a submenu and press **ENTER**. An arrow precedes selections with submenus.

Refer to the following table for information on the keys that you use with BIOS Setup. These keys are also listed at the bottom of the Setup menu.

Table 2: BIOS Setup Keys

Key	Function in Setup Menu
F1 or Alt-H	Get Help about an item.
ESC	Exit the current menu and return to the previous menu.
Left or right arrow keys	Move between menus.
Up or down arrow keys	Move cursor up and down. The cursor moves only to the settings that you can change.

Table 2: BIOS Setup Keys (Continued)

Key	Function in Setup Menu
F9	Load default configuration values for this menu.
F10	Save configuration values and exit.
ENTER	Execute command or Select ➠ submenu.

BIOS Setup Configuration Settings

The BIOS Setup Configuration tables show the default settings for the BIOS Setup Utility and provide a place for you to record any changes you make to these settings. Recommended values are bold in the following tables.

Configuring Your Server

Overview

Configuration and setup utilities are used to change your server configuration. You can configure your server, as well as option boards you may add to your server, using the BIOS Setup Utility. Several unique system parameters are configured using the BIOS Setup, which is stored in the system FLASH memory.

A RAID Setup Utility configures the RAID system and the logical drives connected to the onboard RAID controller.

If your system has been factory configured, the BIOS SETUP or the RAID Setup Utility do not need to be run unless you want to change the password or security features, add certain types of option boards or devices, upgrade your system board, or change the RAID configuration.

This chapter also provides information on several system configuration parameters that are set by jumpers on the system board. However, these parameters do not usually require any changes.

Main Menu

Table 3: Main Menu

Feature	Choices or Display Only	Description	Your Setting
System Time	HH:MM:SS	Set the System Time.	
System Date	MM/DD/YYYY	Set the System Date.	
Hard Disk Pre-Delay	**Disabled** 3, 6, 9, 12, 15, 21, 30 Seconds	Allows to add a delay before the first access of a hard disk drive by the BIOS.	
Primary IDE Master	Selects sub-menu		
Primary IDE Slave	Selects sub-menu		
Secondary IDE Master	Selects sub-menu		
Secondary IDE Slave	Selects sub-menu		
Processor Settings	Selects sub-menu		
Language	**English (US)** Français Deutsch Español Italiano	Select the display language for the BIOS.	

Primary and Secondary Master & Slave IDE submenus

Table 4: Primary And Secondary Master And Slave IDE Submenus

Feature	Choices or Display Only	Description	Your Setting
Type	**Auto** None User CD-ROM	Select Auto if a device is attached to the IDE or serial ATA channel. It is strongly recommended to keep the factory setting **Auto**	
Multi-Sector Transfer	Disabled 2 Sectors 4 Sectors 8 Sectors 16 Sectors	Enables or disables multiple sector transfers support. This field is informational only, for Type Auto.	
LBA Mode Control	Enabled Disabled	LBA stands for "logical block addressing". Instead of referring to locations by passing to the disk a cylinder, head and sector number (CHS addressing), the sectors are serialized so that each just has an integer number; 0, 1, 2, etc. up to the total number of sectors on the disk. Disabled will disable the LBA mode, Auto will enable it if the IDE device supports it. This field is informational only, for Type Auto.	
32-Bit I/O	**Disabled** Enabled	Enables/disables the 32-Bit IDE data transfer mode.	

Table 4: Primary And Secondary Master And Slave IDE Submenus (Continued)

Feature	Choices or Display Only	Description	Your Setting
Transfer Mode	**Standard** Fast PIO 1 Fast PIO 2 Fast PIO 3 Fast PIO **4** FPIO 3/DMA1 FPIO 4/DMA2	Select the method for moving data to/from the drive. This field is informational only, for Type Auto. This field is updated to display only the modes supported by the attached device.	
Ultra DMA	Disabled Mode 0 Mode 1 Mode 2 Mode 3 Mode 4 Mode 5	Selects the DMA mode used for moving data to/from the drive. This field is informative only for Type Auto.	

Processor Settings Submenu

Table 5: Processor Settings Submenu

Feature	Choices or Display Only	Description	Your Setting
Processor Retest	Yes **No**	If Yes is selected, the BIOS will clear historical processor status and retest the processor on next boot.	
Processor Speed	Display only	Displays the processor speed detected by the BIOS	
Processor 1 CPUID	Display only	Displays the processor CPU ID detected by the BIOS, if present Disabled indicates that the CPU is defective.	
Processor 1 L2 Cache	Display only	Displays the processor level 2 cache detected by the BIOS	
Processor 2 CPUID	Display only	Displays the processor CPU ID detected by the BIOS, if present Disabled indicates that the CPU is defective.	
Processor 2 L2 Cache	Display only	Displays the processor level 2 cache detected by the BIOS	
Execute Disabled Bit	**Disabled** Enabled	Displays the CPU which supports Execute Disabled Bit	
Virtualization Technology	Enabled **Disabled**	Enables or disables the Intel(R) Virtualization Technology.	
C1 Enhanced Mode	**Enabled** Disabled	Enables or disables the C1 Enhanced Mode	
Intel(R) Speedstep(R) technology	**Enabled** Disabled	Enables or disables the Intel(R) SpeedStep Technology.	

***Note**: The BIOS may display more options that presented here.*

Advanced Menu

Table 6: Advanced Menu

Feature	Choices or Display Only	Description	Your Setting
Memory Configuration	Select submenu		
PCI Configuration	Select submenu		
Peripheral Configuration	Select submenu		
Advanced Chipset Control	Select submenu		
Boot-time Diagnostic Screen	**Disabled** Enabled	Enables or disables the display of the diagnostic screen during boot. If disabled, the Bull logo is displayed.	
Reset Configuration Data	**No** Yes	Select *Yes* if you want to clear the Extended System Configuration Data (ESCD) area.	
NumLock	On **Off**	Selects power on state for NumLock.	
Memory/Processor Error	**Boot** Halt	If *Boot* is selected, the system will attempt to boot after a memory or processor error.	

Memory Configuration Submenu

Table 7: Memory Configuration Submenu

Feature	Choices or Display Only	Description	Your Setting
System Memory	Display only	e.g. 640 KB	
Extended Memory	Display only	e.g. 784896 KB	
DIMM Group #1 Status	Display only	Indicates the current memory status. "Normal" indicates the normal status, "Disabled" indicates a memory error, and "Not installed" indicates no DIMM installed (display only). Group #1 indicates DIMMs in DIMM sockets #11 and #21. Group #2 indicates DIMMs in DIMM sockets #31 and #41. Group #3 indicates DIMMs in DIMM sockets #12 and #22. Group #4 indicates DIMMs in DIMM sockets #32 and #42. Group #5 indicates DIMMs in DIMM sockets #13 and #23. Group #6 indicates DIMMs in DIMM sockets #33 and #43. (Memory is interleaved and DIMMs are used per pair.)	
DIMM Group #2 Status	Display only		
DIMM Group #3 Status	Display only		
DIMM Group #4 Status	Display only		
DIMM Group #5 Status	Display only		
DIMM Group #6 Status	Display only		

Table 7: Memory Configuration Submenu (Continued)

Feature	Choices or Display Only	Description	Your Setting
Memory Retest	**No** Yes	Clears the memory error status	
Extended RAM Step	1MB 1KB Every location **Disabled**	Test the extended memory once per MB, per KB, every memory location or no test.	
Memory RAS Feature	**Interleave** Mirror	Disables or enables the memory mirroring feature.	
Sparing	**Disabled** Enabled	Disables or enables the online spare memory feature.	

PCI Configuration Submenu

Table 8: PCI Configuration Submenu

Feature	Choices or Display Only	Description	Your Setting
Onboard Video Controller	Select submenu		
Onboard LAN	Select submenu		
PCI Slot 1B Option ROM	Disabled **Enabled**	Used to enable or disable an option ROM on a PCI board connected to the full-height riser card.	
PCI Slot 1C Option ROM	Disabled **Enabled**	Used to enable or disable an option ROM on a PCI board connected to the low-profile riser card.	

PCI Device, Onboard Video Controller Submenu

Table 9: PCI Device, Onboard Video Controller Submenu

Feature	Choices or Display Only	Description	Your Setting
VGA Controller	Disabled **Enabled**	Enables or disables the onboard VGA controller.	
Onboard VGA Option ROM Scan	**Auto** Force	Allows selecting the onboard VGA controller or optional PCI VGA controller as the display device that will be active when the system boots. The “Force” option is selected to use the onboard VGA controller if the optional PCI VGA controller is installed in the system.	

PCI Device, Onboard LAN Submenu

Table 10: PCI Device, Onboard LAN Submenu

Feature	Choices or Display Only	Description	Your Setting
LAN Controller	Disabled **Enabled**	This option allows you to enable or disable the onboard LAN controller	
LAN1 Option ROM Scan	Disabled **Enabled**	Initializes device expansion ROM. Only if Onboard LAN Controller is enabled.	
LAN2 Option ROM Scan	Disabled **Enabled**	Initializes device expansion ROM. Only if Onboard LAN Controller is enabled.	

Peripheral Configuration Submenu

Table 11: Peripheral Configuration Submenu

Feature	Choices or Display Only	Description	Your Setting
Serial Port A	Disabled **Enabled** Auto	Enables or disables the serial port A	
Base I/O address	**3F8** 2F8 3E8 2E8	Set the base I/O address for serial port A	
Interrupt	IRQ3 **IRQ4**	Set the interrupt for serial port A	
Serial port B	Disabled **Enabled** Auto	Enables or disables the serial port B	
Base I/O address	**3F8** 2F8 3E8 2E8	Set the base I/O address for serial port B	
Interrupt	IRQ3 **IRQ4**	Set the interrupt for serial port B	
USB Controller	Disabled **Enabled**	Enables or disables the USB controller.	
USB 2.0 Controller	Disabled **Enabled**	Enables or disables the USB 2.0 controller.	
Parallel ATA	Disabled **Enabled**	Enables or disables the Parallel ATA.	
Serial ATA	Disabled **Enabled**	Enables or disables the Serial ATA.	

Table 11: Peripheral Configuration Submenu (Continued)

Feature	Choices or Display Only	Description	Your Setting
SATA Controller Mode Option	Compatible **Enhanced**	Selects an operation mode of onboard SATA controller. Displayed only when Serial ATA is enabled. Compatible mode: SATA drives are automatically detected and recognized as legacy mode. Enhanced mode: SATA drives are automatically detected and recognized as native mode.	
SATA AHCI	**Disabled** Enabled	Selects whether AHCI (Advanced Host Controller Interface) is enabled or disabled. Displayed only when [Enhanced] is selected for [SATA Controller Mode Option].	
SATA RAID	**Disabled** Enabled	When set to [Enabled], this menu appears if RAID configuration jumper switch is set to [RAID enable] position. See Chapter 4 for details.	

Advanced Chipset Control Submenu

Table 12: Advanced Chipset Control Submenu

Multimedia Timer	**Disabled** Enabled	Enables or disables the multimedia timer feature.	
Intel(R) I/O AT	Disabled **Enabled**	Enables or disables the Intel(R) Acceleration technology.	
Wake on Ring	**Disabled** Enabled	Enables or disables the remote power-on funtion through a serial port.	
Wake on RTC Alarm	**Disabled** Enabled	Enables or disables the remote power-on funtion through the RTC Alarm.	

⚠ Caution

If the AC power is turned off while the Wake On Ring feature is enabled, this feature is disabled at the next system boot after AC power-on. You need to press the Power switch to boot the system. If the AC power is turned off, Wake On Ring feature on power management chip is disabled until the next DC power-on.

Security Menu

***Note**: Enabling the Supervisor Password field requires a password for entering Setup. The passwords are not case sensitive.*

Table 13: Security Menu

Feature	Choices or Display Only	Description	Your Setting
Security Chip Configuration		Displays the Security Chip Configuration Submenu.	
Supervisor Password is	Set Clear	Indicates whether the supervisor password is set (display only).	
User Password is	Set Clear	Indicates whether the user password is set (display only).	
Set Supervisor Password	Up to 8 alphanumeric characters	Press **Enter** to display the supervisor password entry screen. With the supervisor password, all SETUP menus are available for access. This option is available only when you log into the SETUP utility with the supervisor password.	
Set User Password	Up to 8 alphanumeric characters	Press **Enter** to display the user password entry screen. With a user password, only certain menus are accessible. This option is available only if the Supervisor Password is set.	
Password On Boot	**Disabled** Enabled	Specify whether to request a password entry at boot-up. Administrator password setup is required. Only available if supervisor password is set.	
Fixed Disk Boot Sector	**Normal** Write Protect	Allows to write protect hard disk boot sector to protect against viruses.	
Power Switch Inhibit	**Disabled** Enabled	Enables or disables the power switch. When set to Enabled, once the operating system has started, you cannot turn off the system using the power switch. Forced shutdown is also unavailable. (See “Forcing a Power Shutdown” on page 61.)	

Security Chip Configuration Submenu

Table 14: Security Chip Configuration Submenu

Feature	Choices or Display Only	Description	Your Setting
TPM Support	**Disabled** Enabled	Enables or disables the TPM feature.	
Current TPM State		Displays the current TPM state.	
Change TPM State	**No Change** Enabled and Activated Disabled and disactivated Clear	Changes the TPM state.	

Server Menu

Table 15: Server Menu

Feature	Choices or Display Only	Description	Your Setting
System Management	Select Submenu		
Console Redirection	Select Submenu		
BMC LAN Configuration	Select Submenu		
Event Log Configuration	Select Submenu		
Assert NMI on PERR	Disabled **Enabled**	Sets support of PCI bus parity error (PERR).	
Assert NMI on SERR	Disabled **Enabled**	Sets support of PCI bus system error (SERR).	
FRB-2 Policy	Disable FRB-2 Timer Disable BSP Do not Disable BSP **Retry 3 Times**	Sets the FRB level 2 timer.	
Boot Monitoring	**Disabled** 5 Minutes 10 Minutes 15 Minutes 20 Minutes 25 Minutes 30 Minutes 35 Minutes 40 Minutes 45 Minutes 45 Minutes 50 Minutes 55 Minutes 60 Minutes	Sets whether the boot monitoring function is disabled, or, if it is enabled, sets the time limit for time out. It is mandatory to install the NEC ESMPRO Agent in order to use this function.	
Boot Monitoring Policy	**Retry 3 Times** Always Reset	Specifies what happens when a time out is detected during boot monitoring. When **Retry 3 Times** is selected, the system is reset after a time out occurence, and tries 3 times to boot the OS. When **Always Reset** is selected, the system is reset after the time out occurence, and tries repeatedly to boot the OS.	

Table 15: Server Menu (Continued)

Feature	Choices or Display Only	Description	Your Setting
Thermal Sensor	Disabled **Enabled**	Specifies whether the thermal sensor monitoring function is enabled or not. If a thermal error is detected while this parameter is enabled, the system stops at the end of the POST.	
BMC IRQ	Disabled **IRQ 11**	Determines the routing of the BMC Interrupt.	
POST Error Pause	Disabled **Enabled**	Specifies whether the system waits for user intervention on critical POST errors. If no keyboard is connected to the system, this option is ignored and the system always continues to bootup.	
AC-LINK	Stays Off **Last State** Power On	Sets the AC-LINK feature. Determines the mode of operation if a power loss occurs.	
Power On Delay Time (Sec)	20 - 255	Sets the power-on delay time whithin a 0 to 255 seconds range. This parameter is valid when “Power On “ or “Last State” is specified for AC Link.	
Platform Event Filtering	Disabled **Enabled**	This item is meaningless when the notification feature of the Remote Management Card is enabled.	

⚠ Caution

To power on the server from the UPS (Uninterruptible Power Supply), select [Server] - [AC LINK] - [Power On].

The table below shows the operation when the AC power to the server is turn off once and then on again, depending on the setting of "AC LINK."

System status before AC power off	Setting of AC LINK		
	Stay Off	**Last State**	**Power On**
Operating	Off	On	On
Aborting (DC power being off also)	Off	Off	On
Forced shutdown	Off	Off	On

System Management Submenu

Table 16: System Management Submenu

Feature	Choices or Display Only	Description	Your Setting
BIOS Version	e.g. 4N34	Displays the current BIOS version number.	
Board Part Number		Displays the motherboard part number.	
Board Serial Number		Displays the motherboard serial number.	
System Part Number		Displays the system part number.	
System Serial Number		Displays the system serial number.	
Chassis Part Number		Displays the chassis part number.	
Chassis Serial Number		Displays the chassis serial number.	
Onboard LAN1 MAC Address		Displays the Onboard LAN1 port MAC adress.	
Onboard LAN2 MAC Address		Displays the Onboard LAN2 port MAC adress.	
Management LAN MAC Address		Displays the Management LAN port MAC adress.	
BMC Device ID		Displays the BMC device ID.	
BMC Device Revision		Displays the BMC device revision.	
BMC Frimware Revision		Displays the BMC firmware revision.	
SDR Revision		Displays the sensor data record revision.	
PIA Revision		Displays the platform information area revision.	

Console Redirection Submenu

Table 17: Console Redirection Submenu

Feature	Choices or Display Only	Description	Your Setting
BIOS Redirection Port	**Disabled** Serial Port A Serial Port B	Specify the serial port to which a hardware console is connected.	
ACPI Redirection Port	**Disabled** Serial Port A Serial Port B	Specify the serial port to which an ACPI console is connected.	
Baud Rate	9600 **19.2K** 38.4K 57.6K 115.2K	Selects a baud rate for communications with the connected HW console.	
Flow Control	None XON/XOFF **CTS/RTS** CTS/RTS + CD	Select a flow control method.	

Table 17: Console Redirection Submenu (Continued)

Feature	Choices or Display Only	Description	Your Setting
Console Type	**PC ANSI** VT100+ VT-UTF8	Specify the type of remote console.	
Remote Console Reset	**Disabled** Enabled	Enables or disables the reset function when an Escape command is sent from the remote console.	

BMC LAN Configuration Submenu

Table 18: BMC LAN Configuration Submenu

Feature	Choices or Display Only	Description	Your Setting
IP Address	192.168.001.001	Specifies an IP address for the management LAN.	
Subnet Mask	255.255.255.000	Specifies a subnet mask for management LAN.	
Default Gateway	000.000.000.000	Specifies a default gateway for the mangement LAN.	
DHCP	**Disabled** Enabled	Set it to **Enabled** to obtain an IP address from the DHCP server automatically. To specify an IP address manually, set it to **Disabled**.	
Web interface	-	-	
HTTP	**Disabled** Enabled	Set it to Enabled to use HTTP communication for the Web interface.	
HTTP Port Number	80	Specifies the TCP port number which the management LAN uses for HTTP communication.	
HTTPS	**Disabled** Enabled	Set to [Enabled] to use HTTPS communication for Web interface.	
HTTPS Port Number	443	Specifies the TCP port number which the management LAN uses for HTTPS communication.	
Command Line Interface	-	-	
Telnet	**Disabled** Enabled	Set to [Enabled] to use Telnet communication as a command line interface.	
Telnet Port Number	23	Specifies the TCP port number to be used for Telnet communication.	
SSH	**Disabled** Enabled	Set to [Enabled] to use SSH communication as a command line interface.	
SSH Port Number	22	Specifies the TCP port number to be used for SSH communication.	
Clear BMC Configuration		Press Enter and select "Yes" to initialize the BMC configuration.	

⚠ Caution

Notes on performing Clear BMC Configuration

- Executing "Load Setup Defaults" in BIOS SETUP utility does not restore the default value for settings related to management LAN of BMC. To restore the default value, you need to execute Clear BMC Configuration.

- It takes about several tens seconds until initialization completes after execution of Clear BMC Configuration.
- Executing Clear BMC Configuration also clears settings made in NEC DianaScope. Before execution, be sure make backup copy of setting information of NEC DianaScope.

***Note**: Executing [Save Custom Defaults/Load Custom Defaults] of BIOS SETUP does not save the settings you have made in BMC LAN Configuration menu.*

Event Log Configuration Submenu

Table 19: Event Log Configuration Submenu

Feature	Choices or Display Only	Description	Your Setting
System Event Log	Select submenu		
Clear All Event Logs		Press **Enter** and select *Yes* to clear the event log.	

Boot Menu

Table 20: Boot Menu

Feature	Description
USB CDROM	USB CD-ROM drive
IDE CD	ATAPI CD-ROM (including DVD-ROM drive)
USB FDC	USB floppy disk drive
USB KEY	USB flash memory device
IDE HDD	IDE hard disk drives
PCI SCSI	Internal hard disk drives installed in your system (“Software RAID” is displayed in the RAID configuration.)
PCI BEV	**IBA GE Slot xxxx** Onboard LAN. LAN1: Slot 0C00, LAN2: Slot 0C01 **Other indication** Optional PCI board connected to the riser module.

1. When the BIOS detects a bootable device, it displays the information on the device in the relevant description.

   To boot the server from a desired device, the device must be registered as a boot device. (Up to eight boot devices can be registered.)

2. Pressing **X** after selecting a device allows the selected device to be registered as a boot device or deleted from the registration.

   When eight boot devices are registered, no other device can be registered as a boot device, even if you press **X**. To register another device as aboot device, you first need to delete the reigstration from a device which is not anymore used to boot.

   Pressing **Shift + 1** after selecting a device enables/disables the selected device.

3. You can change the boot priority (first to eighth) of each device by using the up and down arrow keys, and + and/or –.

   To change the priority of a device, move the cursor to the device by using the up and down arrow keys, and press + or –.

Exit Menu

⚠ Caution

For the 3.5-inch disk model, record the current SATA controller options in the Peripheral Configuration page of the Advanced menu before reloading the Setup or custom defaults. The SATA controller options affect the RAID System configuration.

You can make the following selections on the Exit Menu. Select an option using the up or down arrow keys, then press <Enter> to execute the option. Pressing <Esc> does not exit this menu. You must select one of the items from the menu or menu bar to exit.

Table 21: Exit Menu

Choices	Description
Exit Saving Changes	Exits after writing all modified Setup item values to NVRAM. F10 key can be used for this operation.
Exit Discarding Changes	Exits leaving NVRAM unmodified. User is prompted if any of the setup fields were modified. Esc key can be used for this operation.
Load Setup Defaults	Loads default values for all SETUP items. F9 key can be used for this operation.
Load Custom Defaults	Loads the custom defaults for the BIOS Setup options.
Save Custom Defaults	Saves the current values as custom defaults. This menu is only available once the Load Custom Defaults option has been used.
Discard Changes	Read previous values of all Setup items from NVRAM.
Save Changes	Save changes to NVRAM without exiting the Setup.

RAID Configuration

This section describes how to use the internal hard disk drives as RAID System by Onboard RAID Controller (LSI Embedded MegaRAID) installed in 3.5-inch disk model or Internal RAID Controller installed in 2.5-inch disk model.

About the optional RAID Controller for 3.5-inch disk model, refer to the documents provided with optional RAID Controller.

RAID

Overview of RAID System

What is RAID (Redundant Array of Inexpensive Disks)?

RAID is an abbreviation for "Redundant Array of Inexpensive Disks". The RAID technology allows more than one hard disk drive (HDD) to be handled collectively.

In actual, RAID can configure more than one HDDs as a single array (disk group) to operate the HDDs effectively. This can bring higher performance than a single HDD of a large capacity.

The Onboard RAID Controller (LSI Embedded MegaRAID) or Internal RAID Controller has a feature to divide a single disk group into several virtual drives (virtual disks). The RAID controller recognizes these virtual disks as if it were a single hard disk drive. The RAID Controller accesses to more than one hard disk drive configuring a disk group in parallel.

Some RAID levels can recover data from remaining data and parity by using the Rebuild feature if an error occurs in a single HDD. This can provide high reliability for the system.

RAID Levels

The record mode enabling the RAID feature includes several levels. Among the levels, the Onboard RAID Controller (LSI Embedded MegaRAID) supports RAID levels 0 and 1. The Internal RAID Controller supports RAID levels 0, 1, 5, and 6. The number of hard disk drives required to create a disk group varies depending on the RAID level as shown in the table below.

Table 22: RAID levels

RAID level	Number of required HDDs	
	Min.	Max.
RAID 0	1	8
RAID 1	2	2
RAID 5	3	8
RAID 6	3	8

Caution

To use RAID 5 or RAID 6 with the Internal RAID Controller, you need to install the optional RAID Upgrade Kit.

Note:*For details of the RAID levels, see "RAID Levels" described later in this chapter.*

Disk Group

A disk group is configured with more than one HDDs.
The allowable number of disk groups is equal to the number of HDDs.

The figure below shows a sample Configuration. The three HDDs are connected to the Onboard RAID Controller (LSI Embedded MegaRAID) or Internal RAID Controller, creating one disk group (DG).

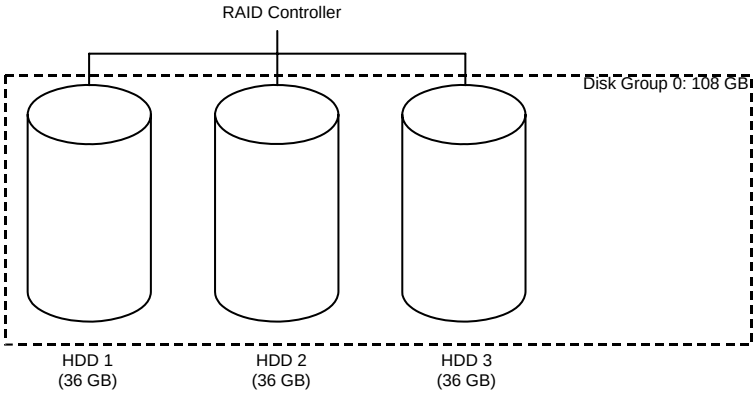

Figure 31: Sample RAID Configuration

Virtual Disk

Virtual disk is a virtual drive defined in disk group. It is recognized as a physical drive by OS. The allowable number of virtual disks is up to 16 per disk group, or up to 64 per controller.

The figure below shows a sample Configuration in which the Onboard RAID Controller (LSI Embedded MegaRAID) or Internal RAID Controller is connected with three HDDs, creating one Disk Group. Two RAID5 virtual disks (VD) are defined in the Disk Group.

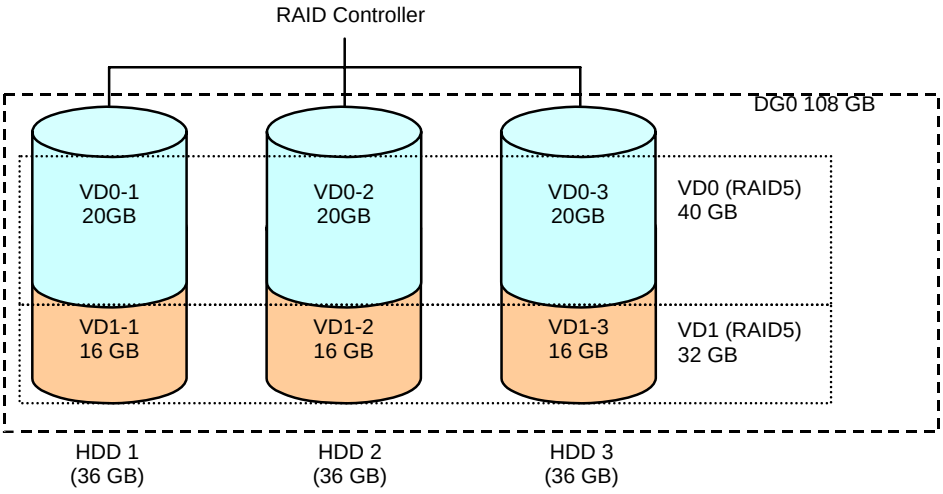

Figure 32: Sample Virtual Disk Configuration

Parity

The parity means redundant data. A single set of redundant data is created from the data saved in more than one HDD.

The created redundant data is used for data recovery when a HDD is defective.

Hot-Swap

The hot-swap enables a HDD to be removed (or replaced) under system operation.

Hot-Spare

The hot-spare is prepared as an auxiliary HDD substituting for a defective HDD included in a virtual drive which is configured at a redundant RAID level. Detecting a HDD fault, the system disconnects the HDD (or makes it offline) and starts Rebuild using the hot-spare.

RAID Levels

The table below lists the characteristics of the RAID levels.

Figure 33: RAID Levels Characteristics

Level	Function	Redundancy	Characteristics
RAID 0	Striping	No	Data read/write at the highest rate Largest capacity Capacity: (capacity of single HDD) × (number of HDDs)
RAID 1	Mirroring	Yes	Two HDDs required Capacity: capacity of single HDD
RAID 5	Striping of both data and redundant data	Yes	Three or more HDDs required Capacity: (capacity of single HDD) × ((number of HDDs) - 1)
RAID 6	Striping of both data and redundant data	Yes	Three or more HDDs required Capacity: (capacity of single HDD) × ((number of HDDs) - 2)

Caution

To use RAID 5 or RAID 6 with Internal RAID Controller, you need to install the optional RAID Upgrade Kit.

RAID0

In RAID0, data to be recorded is distributed to HDDs. The mode is called "striping".

In the figure below, data is recorded in stripe 1 (disk 1), stripe 2 (disk 2), and stripe 3 (disk 3)… in the order. Because RAID0 allows all HDDs to be accessed collectively, it can provide the best disk access performance.

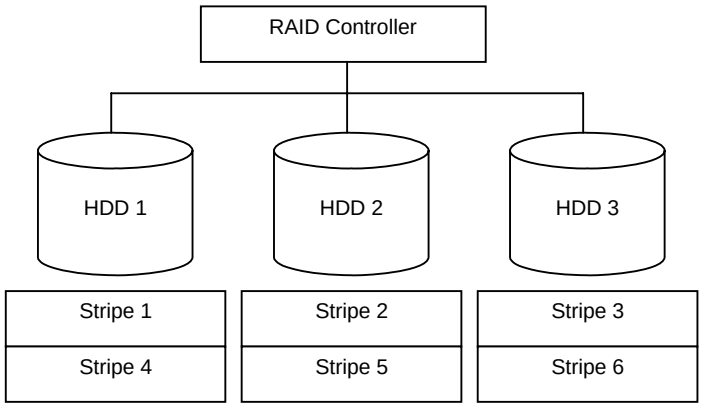

Figure 34: RAID0 Configuration

***Note**: RAID0 cannot have data redundancy. If a HDD is defective, the data saved in the HDD cannot be recovered.*

RAID1

In the RAID1 level, data saved in a HDD is written to another HDD without change. The mode is called "mirroring".

When data is written onto a single HDD, the same data is written onto another HDD. If either of the HDDs is defective, the other HDD containing the same data can substitute for the defective HDD. Thus the system can continue to operate without interruption.

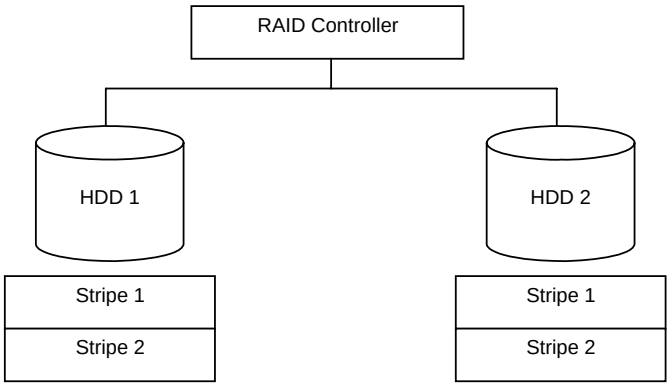

Figure 35: RAID1 Configuration

RAID5

In RAID5, data is distributed to HDDs by striping and, at the same time, the parity (redundant data) is distributed to the HDDs. This mode is called "striping with distributed parity".

Each of stripe x, stripe x+1, and parity (x, x+1) created from stripe x and stripe x+1 is written onto a specific HDD. Accordingly, the total capacity assigned to the parity is just the same as the capacity of a single HDD. If any one of the HDDs configuring a virtual drive is defective, data is still available with no problems.

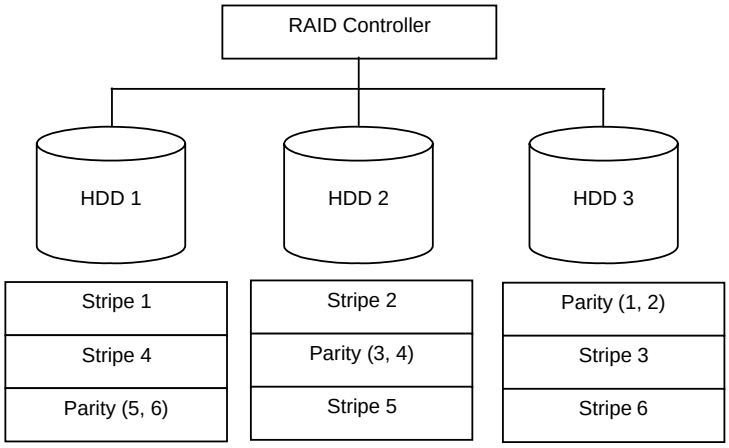

Figure 36: RAID5 Configuration

RAID6

A RAID 6 extends RAID 5 by adding an additional parity block (Q) created by different calculation method such as weighting by some factor, thus it uses block-level striping with two parity blocks distributed across all member disks. This mode is called "striping with duplex and distributed parity". Accordingly, the total capacity assigned to the parity is just the same as the capacity of two HDDs. If any two of the HDDs configuring a virtual drive are defective, data is still available with no problems.

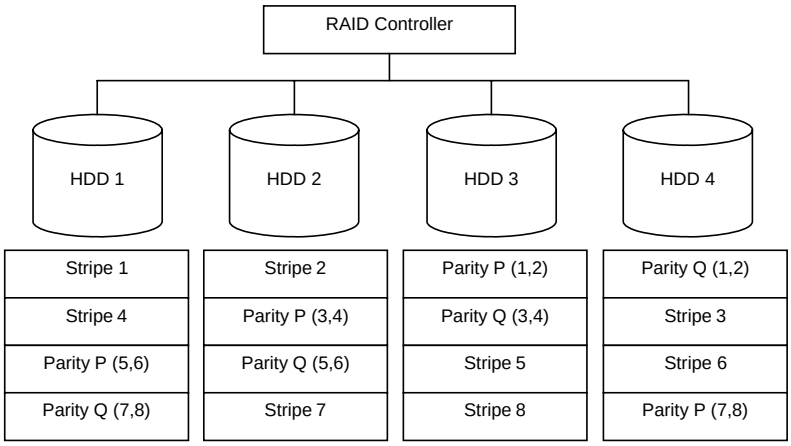

Figure 37: RAID6 Configuration

Configuration by Onboard RAID Controller (3.5-inch Disk Model)

This section describes how to use the internal hard disk drives as RAID System by Onboard RAID Controller (LSI Embedded MegaRAID) of 3.5-inch disk model.

Installing the Hard Disk Drives

Install two or more SAS hard disk drives to your server. *See "Installing and Removing a Hard Disk Drive" on page 161.*

⚠ Caution

Use two hard disk drives of the same revolution.
Also use two hard disk drives of the same capacity if you are going to configure the array in RAID1.

Enabling RAID Feature

To configure a hard disk drive as RAID System, change the BIOS setting or the RAID System Configuration jumper switch on motherboard.

Note: *The RAID System is factory-set to "Enabled".*

1. See the section *"Preparing Your Server for Upgrade" on page 159*.
2. Remove the logic cover. *See "Removing and Replacing the Top Cover" on page 175.*
3. Remove the Riser Card.
4. Locate the position of the RAID Configuration jumper on the motherboard as shown below.

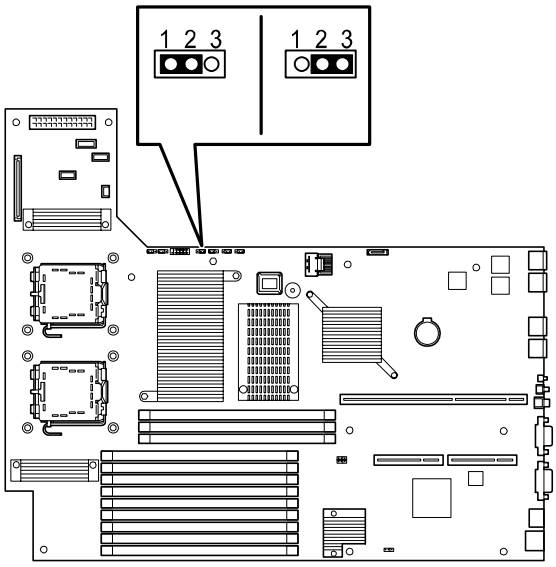

Figure 38: RAID Configuration Jumper on Motherboard

5. Remove the jumper from position 2 – 3 on jumper block.
6. Reinstall the jumper on position 1 – 2 on jumper block.
7. Reinstall the logic cover removed in Step 2.
8. Plug the power cord to your server and turn on the server.
9. Run the BIOS SETUP utility described earlier in the chapter.
10. Choose the Peripheral Configuration submenu in the Advanced menu.
11. Change the options as follows.
    SATA Controller Mode Option: Enhanced
    SATA RAID: Enabled
12. Save and exit the BIOS SETUP utility

Running LSI Software RAID Configuration Utility

1. When the full screen logo appears after you have powered on the server, press **Esc**. The POST screen appears.
2. Check the description shown on the POST screen, then press **Ctrl + M**.

   The LSI Software RAID Configuration Utility starts. If you fail to press Ctrl + M and the system proceeds without displaying the following menu screen, reboot the system, and press **Ctrl** + **M** on POST screen.

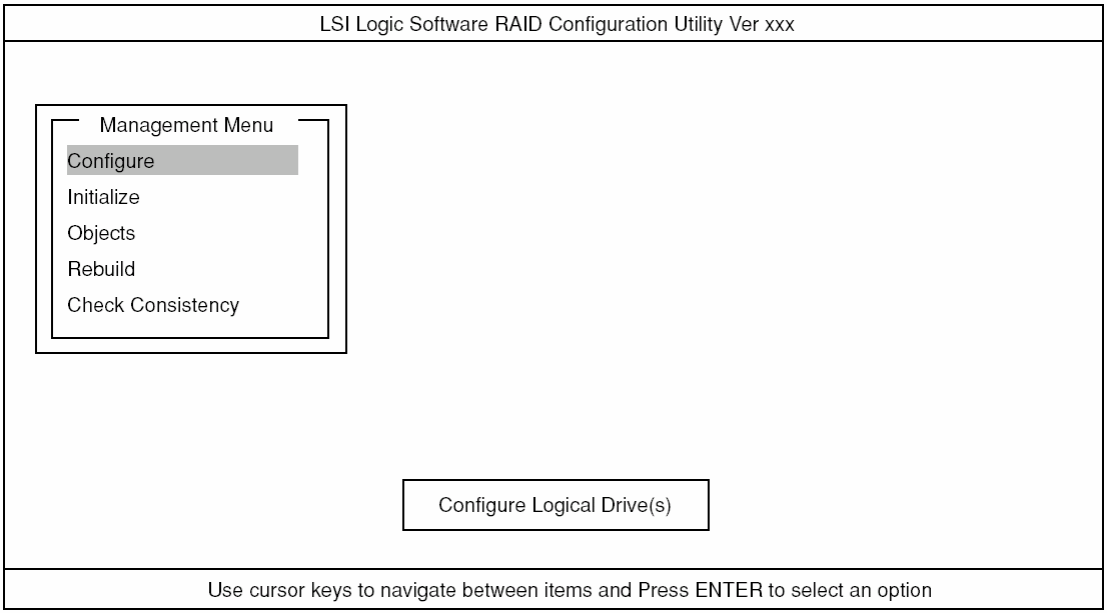

Figure 39: LSI Software RAID Configuration Utility TOP Menu (Management Menu)

To quit the utility, press **Esc** in the TOP menu.

When a confirmation message appears, select [Yes].

When the above message appears, press **Ctrl + Alt + Delete.** The server reboots.

Menu Tree

+: Selection/execution parameter

←: Setting parameter.

•: Information display

>: Can be set (modified) after creation of virtual drive

Table 23: Menu Tree

Menu	Description
+Configure	Performs Configuration settings
+Easy Configuration	Set Configuration (Using fixed value)
+New Configuration	Set new Configuration
+View/Add Configuration	Additional setting / viewing Configuration

Table 23: Menu Tree (Continued)

Menu			Description
+Clear Configuration			Clear Configuration
+Select Boot Drive			Chose Bootable Virtual Drive
+Initialize			Initialize virtual drive
+Objects			Various settings
+Adapter			Set RAID Controller
	+Sel. Adapter		Clear Configuration
		←Rebuild Rate	30
		←Chk Const Rate	30
		←FGI Rate	30
		←BGI Rate	30
		←Disk WC	Off
		←Read Ahead	On
		←Bios State	Enable
		←Stop on Error	No
		←Fast Init	Enable
		←Auto Rebuild	On
		←Auto Resume	Enable
		←Disk Coercion	1GB
		←Factoty Default	
+Virtual Drive			Virtual drive operation
	+Virtual Drives		Select virtual drive (when multiple virtual drives exist)
	+Initialize		Initialize virtual drive
	+Check Consistency		Check virtual drive redundancy
	+View/Update Parameters		Display virtual drive information
	• RAID		Display RAID level
	• SIZE		Display virtual drive capacity
	• Stripe SIZE		Display stripe size
	• #Stripes		Display the number of hard disk drives in virtual drive
	• State		Display virtual drive status
	• Spans		
	• Disk WC		Off: Write through On: Write back
	• Read Ahead		
+Physical Drive			Physical drive operation
+Physical Drive Selection Menu			Select physical drive
	+Make HotSpare		Set as hot-spare disk for auto rebuilding
	+Force Online		Make a disk online
	+Force Offline		Make a disk offline

Table 23: Menu Tree (Continued)

Menu		Description
	+Drive Properties	Display hard disk drive information
	• Device Type	Hard disk drive type
	• Capacity	Hard disk drive capacity
	• Product ID	Hard disk drive model
	• Revision No.	Hard disk drive revision
+Rebuild		Perform rebuilding
+Check Consistency		Perform virtual drive redundancy check

Operating Procedures for the Configuration Utility

Creating/Adding Configuration

Run LSI Software RAID Configuration Utility

↓

Set new Configuration information (pack/virtual drive settings)

↓

Check the virtual drive settings

↓

Initialize virtual drive

↓

Perform Consistency Check

↓

Exit LSI Software RAID Configuration Utility

1. Run the LSI Software Raid Configuration Utility.

Select "Configure" → "New Configuration" from the TOP menu (Management Menu).

Select "View/add Configuration" to add a Configuration.

⚠ Caution

- Creating a Configuration using the "New Configuration" menu clears any existing Configuration information. To add Configuration information to an existing Configuration, select "View/add Configuration."
- You cannot create a Spanning of RAID1 or set the virtual drive capacity on the "Easy Configuration" menu.
  Use the "New Configuration" or "View/Add Configuration" instead.

2. When a confirmation message (Proceed?) is displayed, select "Yes."

The SCAN DEVICE starts (the scanning information is displayed at the bottom of the screen). Upon completion of the SCAN DEVICE, the "New Configuration - ARRAY SELECTION MENU" screen appears.

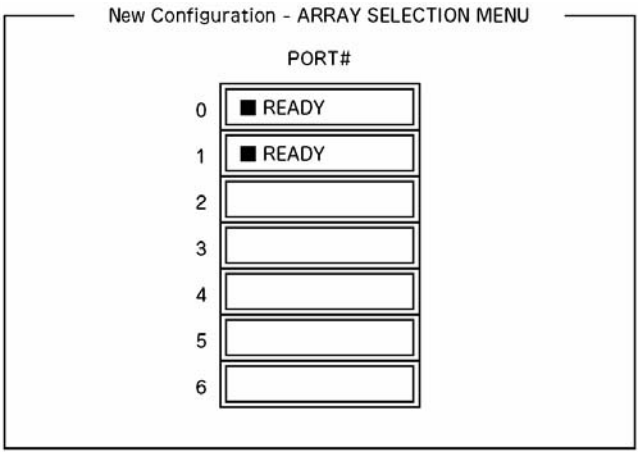

3. Move the cursor onto the hard disk drive to be packed by using the cursor key and then press **Space** to select the hard disk drive.

   The display for the selected hard disk drive changes from READY to ONLINE.

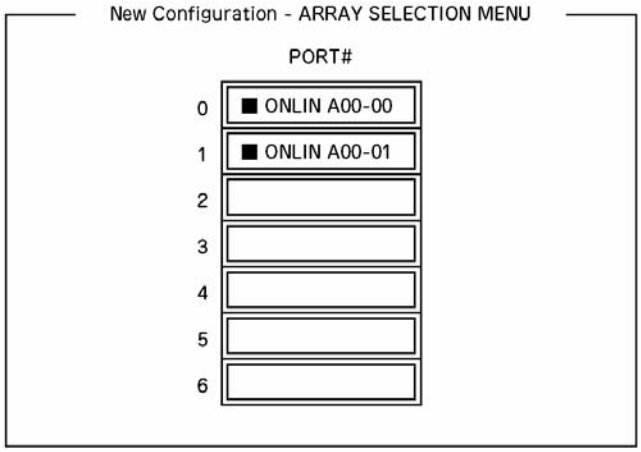

4. Press **F10** to set "Select Configurable Array(s)".
5. Press **Space**.

   SPAN-1 is set.

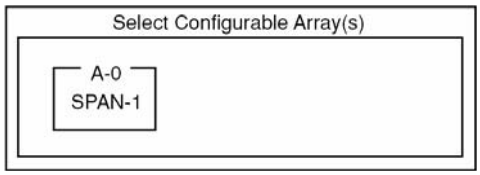

6. Press **F10** to create a virtual drive.

   The "Virtual Drives Configure" screen appears. (The figure below shows an example of RAID1 configured with two hard disk drives.)

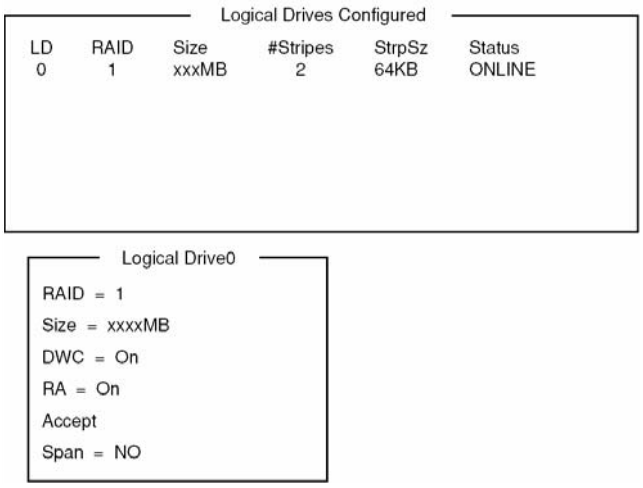

Figure 40: Virtual Drives Configuration Screen

7. Select "RAID," "Size", "DWC", "RA", or "Span" by using cursor keys. Then press **Enter** to fix the selection and set each value.

(1) “RAID”: Sets the RAID level.

Parameter	Remarks
0	RAID0
1	RAID1

The selectable RAID level varies depending on the number of hard disk drives that configure a pack.

(2) “Size”: Sets the virtual drive size.

Up to 8 virtual drives can be created per RAID controller.

(3) “DWC”: Sets the parameter for the Disk Write Cache.

Parameter	Remarks
Off	Write through
On	Write back

(4) “RA”: Sets the parameter for the Read Ahead.

Parameter	Remarks
Off	Does not perform read ahead
On*	Performs read ahead

*Recommended setting.
"Write-back On" enables good performance, however, cache data may be lost at an unexpected power failure. "Write-back Off" reduces performance by approximately 50%.

(5) “Span”: Sets the Span.

Parameter	Remarks
SPAN=NO	Does not set span
SPAN=YES	Sets span

When performing SPAN, create two or more sets of the same pack at the pack creation, as shown in the figure below.

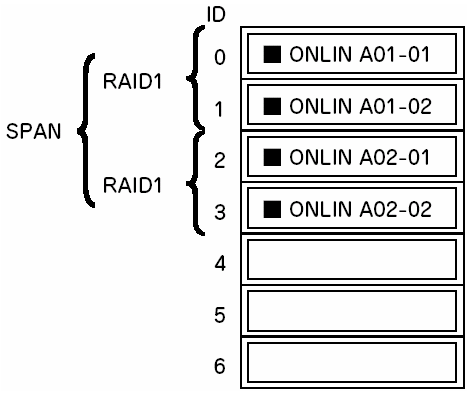

Figure 41: SPANNING of RAID1

8. When all the settings are completed, select "Accept" and then press **Enter** to create the virtual drive.

The created virtual drive is displayed in the "Virtual Drive Configured" screen.

9. After creating a virtual drive, press **Esc** to close the screen.

   Go back to the "Save Configuration?" screen and then select "Yes" to save the Configuration.
10. When the confirmation message shows that the Configuration has been saved, press **Esc** to return to the TOP menu screen.
11. On the TOP menu screen, select "Objects" → "Virtual Drive" → "View/Update Parameters" to check the virtual drive information.
12. Select "Initialize" in the TOP menu screen.
13. When the "Virtual Drives" screen appears, move the cursor to the virtual drive to be initialized, and press **Space**.

    The virtual drive is selected.
14. After selecting virtual drive, press **F10** to start initialization.

    Press "Yes" when prompted for confirmation.

    When the progress bar in the "Initialize Virtual Drive Progress" screen indicates 100%, initialization is completed.
15. Execute Check Consistency on the virtual drive that has been initialized.

    See "Check Consistency" for details.
16. Press **Esc** to return to the TOP menu and exit the LSI Software Raid Configuration Utility.

⚠ Caution

Be sure to execute Check Consistency after creating Configuration.

Manual Rebuild

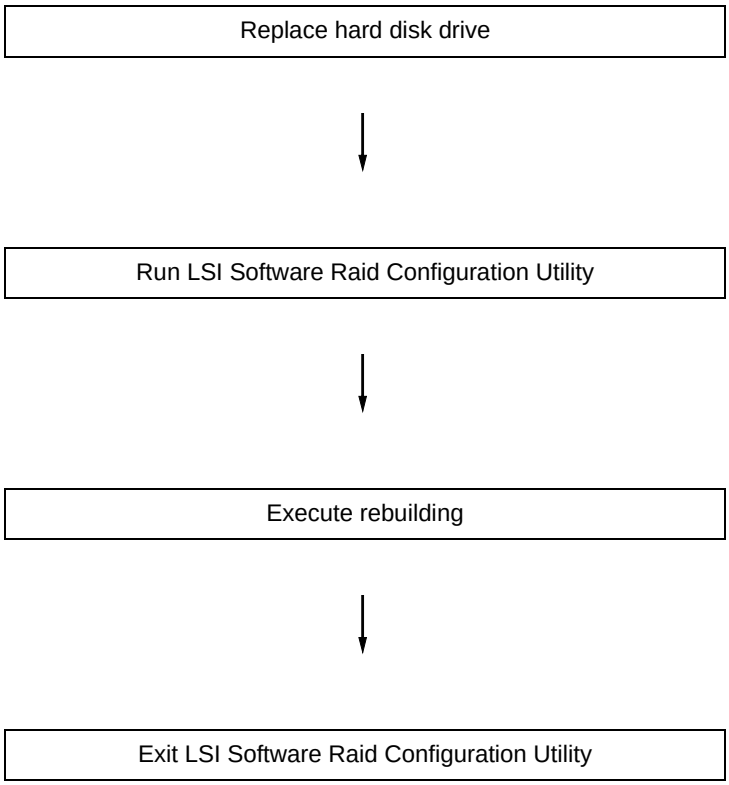

1. Replace a hard disk drive and turn on the server.
2. Run the LSI Software Raid Configuration Utility.
3. Select "Rebuild" from the TOP menu.
   The "Rebuild – PHYSICAL DRIVES SELECTION MENU" screen appears.

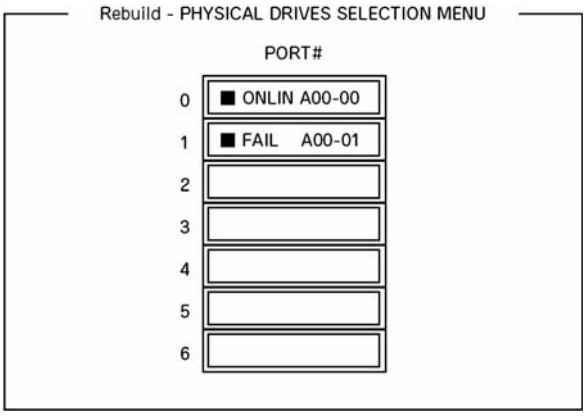

Figure 42: Physical Drives Selection menu

4. Move the cursor onto the hard disk drive displaying "FAIL" and then press **Space** to select it.
   Multiple hard disk drives can be selected (simultaneous rebuilding.)
5. The "FAIL" indication for the hard disk drive selected starts blinking.
6. When the hard disk drive has been selected, press **F10** to start rebuilding.
7. Press "Yes" when prompted for confirmation.
   The Rebuild process starts.

When the progress bar in the "Rebuild Physical Drives in Progress" screen indicates 100%, the rebuilding is completed.

8. Press **Esc** to return to the TOP menu and exit the LSI Software Raid Configuration Utility.

Setting Hot Spare

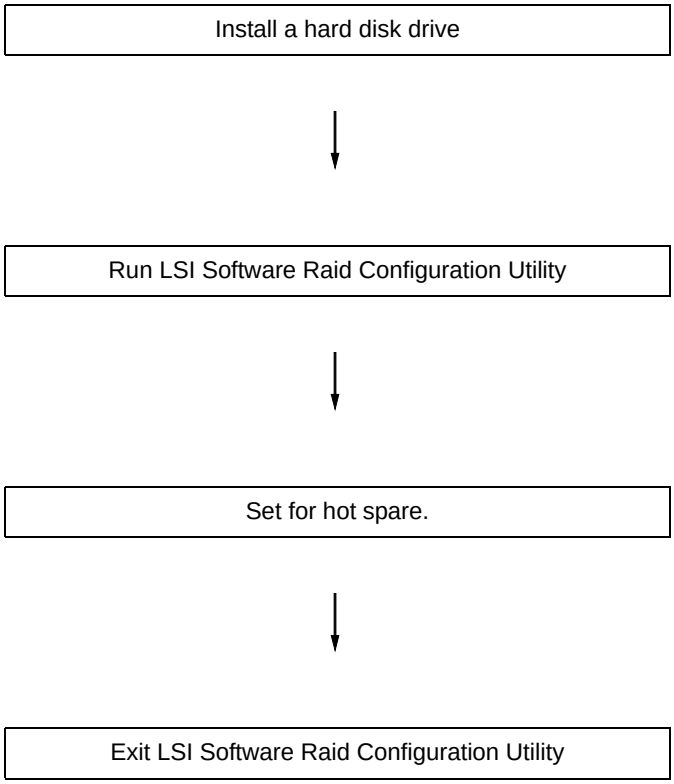

1. Install a hard disk drive to be used as hot spare, and then turn on the server.
2. Run the LSI Software Raid Configuration Utility.
3. Select "Objects" → "Physical Drive" from the TOP menu.
   The "Objects - PHYSICAL DRIVE SELECTION MENU" screen appears.

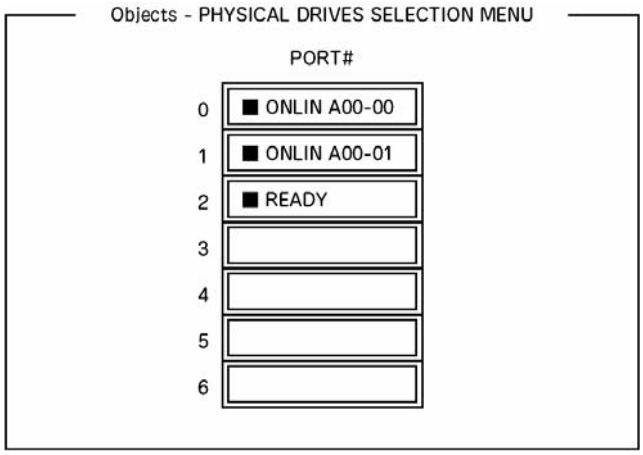

Figure 43: Physical Drives Selection menu

4. Move the cursor onto the hard disk drive to be used as hot spare and press **Enter**.
5. The "Port #X" screen appears. Select "Make HotSpare."
6. A confirmation screen appears. Select "Yes."

   The hard disk drive indication is changed to "HOTSP."
7. Press **Esc** to return to the TOP menu and exit the LSI Software Raid Configuration Utility.

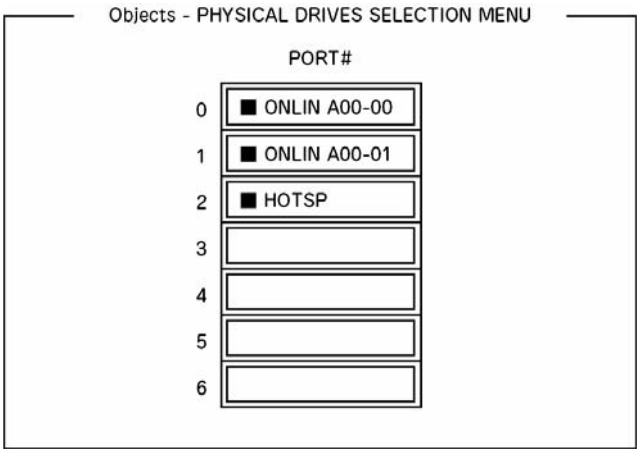

Figure 44: Physical Drives Selection menu

⚠ Caution

- Select "Objects" → "Physical Drive" → "Port #X" → "Force Offline" to cancel the hot spare setting.
- When two or more hard disk drives (of the same capacity) are assigned as hot spare, rebuilding starts with the one with the smaller CH number/ID number.

Check Consistency

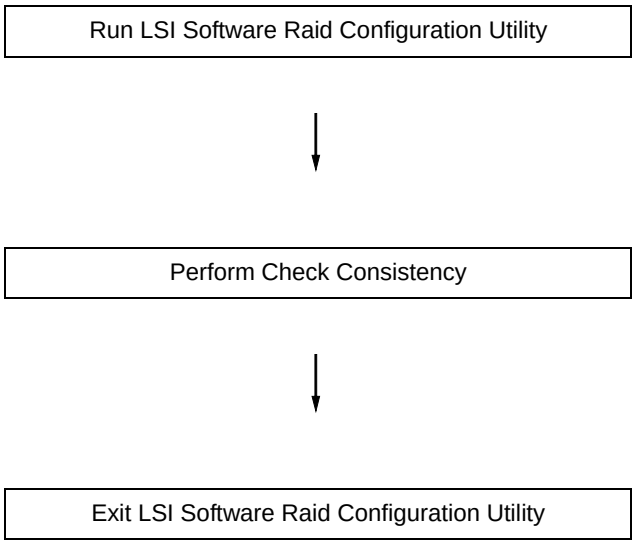

1. Run the LSI Software Raid Configuration Utility.
2. Select "Check Consistency" from the TOP menu.

   The "Virtual Drives" screen appears.
3. Move the cursor onto the virtual drive to be checked, and press **Space** to select it.
4. When a virtual drive has been selected, press **F10** to start the Consistency Check.
5. When prompted to do so, press "Yes".

   The Consistency Check starts.

   When the progress bar in the "Check Consistency Progress" screen indicates 100%, the Consistency Check is completed.
6. Press **Esc** to return to the TOP menu and exit the LSI Software Raid Configuration Utility.

⚠ Caution

Be sure to execute Check Consistency after creating a Configuration.

Others

Clear Configuration

Clears the Configuration information. Select "Configure" → "Clear Configuration" from the TOP menu. Executing "Clear Configuration" clears all Configuration information on the RAID Controller and hard disk drives. The Configuration information on all channels of the RAID Controller is also cleared.

Notes:

- *When the Configuration information on the RAID Controller and that on the hard disk drive do not match (excluding at the replacement of a aulty RAID Controller), Configuration may fail if you select the Configuration information on the RAID Controller. In this case, execute "Clear Configuration" to create Configuration again.*
- *LSI Software Raid Configuration Utility cannot delete each virtual drive. Use the Universal RAID Utility instead.*

Force Online

Puts online a hard disk drive being in the FAIL status.

Select "Objects" → "Physical Drive" → (select hard disk drive) → "Force Online" from the TOP menu.

Rebuild Rate

Sets the Rebuild Rate.

Select "Objects" → "Adapter" → "Sel. Adapter" → "Rebuild Rate" from the TOP menu.

Available value is between 0% and 100%. Default value (recommended) is 30%.

Hard disk drive information

Checks hard disk drive information.

Select "Objects" → "Physical Drive" → (select hard disk drive) → "Drive Properties" from the TOP menu.

LSI Software RAID Configuration Utility and Universal RAID Utility

You can use the Universal RAID Utility for the configuration, management, and monitoring of the RAID System under the operating system.

The points to keep in mind when using the Universal RAID Utility together with LSI Software RAID Configuration Utility are as follows.

Terms

LSI Software RAID Configuration Utility and Universal RAID Utility use different terms. Please refer to the following list.

Table 24: RAID terminology

LSI Software RAID Configuration Utility	Universal RAID Utility
Adapter	RAID Controller
Logical Drive	Logical Drive
Array	RAID system
Physical Drive	Physical Device

Number and ID

The numbers assigned to each component are different in both utilities.

Adapter and RAID Controller

The LSI Software RAID Configuration Utility identifies the Adapter starting from 0. You can see the Adapter number using [Sel. Adapter] in the [Objects] menu.

The Universal RAID Utility identifies the RAID Controller starting from 1. You can see the RAID Controller number using [Number] in the RAID Controller properties on the RAID Viewer or using [RAID Controller #X] in the RAID Controller properties on the raidcmd command.

You can also see the Adapter number managed by the LSI Software RAID Configuration Utility in [ID] in the RAID Controller properties of the Universal RAID Utility.

Logical Drive

The LSI Software RAID Configuration Utility identifies the Logical Drive starting from 0. You can see the Logical Drive number using [Logical Drives] in the [Objects] menu.

The Universal RAID Utility identifies the Logical Drive starting from 1. You can see the Logical Drive number using [Number] in the Logical Drive properties on the RAID Viewer or using [RAID Controller #X Logical Drive #Y] in the Logical Drive properties on the raidcmd command.

You can also see the Logical Drive number managed by the LSI Software RAID Configuration Utility in [ID] in the Logical Drive properties of the Universal RAID Utility.

RAID system

The LSI Software RAID Configuration Utility identifies the RAID system starting from 0. You can see the RAID system number using [Axx] in [Objects - PHYSICAL DRIVE SELECTION MENU] DG X] in the [Objects] menu.

The Universal RAID Utility identifies the RAID system starting from 1. You can see the RAID system number using [RAID system] in the Logical Drive properties on the RAID Viewer or using [RAID Controller #X RAID system #Y] in the RAID system properties on the raidcmd command.

Physical Drive and Physical Device

The LSI Software RAID Configuration Utility identifies a Physical Drive using IDs. You can see the ID of a Physical Drive using [Port #] of [Objects - PHYSICAL DRIVE SELECTION MENU] DG X] in the [Objects] menu.

The Universal RAID Utility identifies Physical Devices starting from 1 and using an ID. You can see the number and ID of a Physical Device using [Number] and [ID] in the Physical Device properties on the RAID Viewer or the [RAID Controller #X Physical Device #Y] and [ID] in the Physical Device properties on the raidcmd command.

Priority Settings

The LSI Software RAID Configuration Utility displays and sets the Rebuild Priority and the Consistency Check Priority of the RAID Controller using a percentage whereas the Universal RAID Utility uses three levels (High/Middle/Low).

See the correspondence table below.

Table 25: Priority and Value Settings

Item	Setting value of the LSI Software RAID Configuration Utility	Universal RAID Utility Level
Rebuild Priority Rebuild Rate (LSI Software RAID Configuration Utility)	15 to 100	High
	8 to 14	Middle
	0 to 7	Low
Consistency Check Priority Chk Const Rate (LSI Software RAID Configuration Utility)	15 to 100	High
	8 to 14	Middle
	0 to 7	Low

***Notes**:*

- *The LSI Software RAID Configuration Utility can set a FGI Rate (Foreground Initialize) and a BGI Rate (Background Initialize Priority) whereas the Universal RAID Utility cannot.*
- *The Universal RAID Utility can set an Initialization Priority, but it can't set it to the LSI Embedded MegaRAID. Therefore, the Universal RAID Utility doesn't display the [Initialization Priority] in the RAID Controller properties. Changing the Initialization Priority by raidcmd command will also fail.*

Configuration by Internal RAID Controller (2.5-inch Disk Model)

This section describes how to set the internal hard disk drives as a RAID System using the Internal RAID Controller of the 2.5-inch disk model.

Rebuild

If a HDD is defective, the Rebuild feature can recover the data in the defective HDD. The Rebuild can be applied to redundant virtual disks in the RAID1, RAID5, or RAID6 level.

Manual Rebuild

The Manual Rebuild can be performed using the Universal RAID Utility, the management utility of the Internal RAID Controller. Select a HDD and start the Rebuild manually.

Refer to the "Universal RAID Utility User's Guide" in ExpressBuilder DVD that comes with the server.

Auto Rebuild

The Internal RAID Controller can automatically start the Rebuild.

The Auto Rebuild can be of two types, as follows:

Standby Rebuild

Automatic Rebuild by using hot-spares. In the configuration including hot-spares, the Rebuild is performed automatically if a HDD assigned to a virtual disk is defective.

Hot-swap Rebuild

Automatic Rebuild by hot-swapping a defective HDD.

Note *the following for the Rebuild:*

- *The HDD used for the Rebuild should have the same capacity, rotation speed, and standard as the defective HDD.*
- *During a Rebuild, the processing rate is decreased becaus of the high load.*
- *During a Rebuild, do not shutdown or reboot the server. If the server is shutdown by an unforeseen accident such as power interruption, turn on the power again as soon as possible. The Rebuild restarts automatically.*
- *The interval between the removal of the defective HDD and the installation of a substitute HDD should be at least 60 sec.*

- *If the hot-swap Rebuild does not operate, perform a Manual Rebuild.*

Patrol Read

The Patrol Read performs a read & verify test in the entire area of the HDDs. It can be performed for all the HDDs assigned to virtual disks and hot-spares.

The Patrol Read allows subsequent defects of the HDDs to be detected and repaired.

For HDDs configuring redundant virtual disks or those assigned to hot-spares, the error sectors detected during the Patrol Read can be repaired.

Note *the following for the Patrol Read:*

- *For the Internal RAID Controller, the Patrol Read feature is factory-set to "Enabled". For the external SAS RAID controller, the Patrol Read feature is either enabled or disabled depending on firmware.*
- *To change the Patrol Read settings, use the Universal RAID Utility.*
- *If the system is restarted while running Patrol Read, Patrol Read resumes from the point where it was stopped.*

Consistency Check

Use the Consistency Check to check the consistency among the virtual drives. It is available for redundant virtual drives except for RAID0. It is also available for the hot spare.

The Consistency Check can be performed through WebBIOS or the Universal RAID Utility.

The Consistency Check performs not only a Consistency Check but also repairs the error sectors. It can also be used as a preventive maintenance.

Note *the following for the Consistency Check:*

- *During Consistency Check, the processing rate is decreased due to the high load.*
- *If the system is restarted, the Consistency Check is aborted, but resumes afterwards.*
- *To schedule the execution of the Consistency Check, use WebBIOS, not the Universal RAID Utility*

Background Initialize

The Background Initialize is automatically executed when a RAID5 virtual disk is created in the disk group including five or more HDDs.

The Background Initialize performs the parity generation processing in the background of the area not initialized. This process is equivalent to a Consistency Check.

The Background Initialize is not performed in the following cases.

- A Full Initialize has already been executed and completed normally before executing a Background Initialize.

  (*) Full Initialize clears the entire area of a virtual disk with "0".

- A Consistency Check has already been executed and completed normally before executing a Background Initialize.

- A Rebuild has already been executed and completed normally before executing a Background Initialize (for RAID5 only).

  “Yes" is specified for "Disable BGI" in VD Definition.

- The Virtual disk is in degraded or offline state.
  A Background Initialize is performed if the virtual disk of RAID6 is partially degraded.

The Background Initialize is executed again if any of the following cases occurred in the virtual disk on which a Background Initialize was already completed.

- When the virtual disk is degraded or offline, the offline HDD is put Online, and the virtual disk state becomes Optimal.

- When you replace the RAID Controller.

- When you execute a Reconstruction to an existing virtual disk to make a RAID5 VD with five or more HDDs.

***Note** the following for Background Initialize:*

- *During Background Initialize, the processing rate is decreased due to the high load.*

- *Background Initialize will resume a few minutes later if it is interrupted.*

Reconstruction

The reconstruction feature is used to change the configuration and/or RAID level of the existing virtual disk. The Reconstruction includes three features, however, the Internal RAID Controller supports only the "Migration with addition".

⚠ Caution

You can use WebBIOS for the Reconstruction whereas the Universal RAID Utility does not support the Reconstruction feature.

Removed physical drive

Unsupported.

Migration only

Unsupported.

Migration with addition

Use this feature to add HDDs to an existing virtual disk. The execution patterns are as shown below (α: Number of HDDs to be added).

Table 26: Migration with addition

Before execution		After execution		Description
RAID level	Number of HDDs	RAID level	Number of HDDs	
RAID0	x	RAID0	x+α	Capacity increased: equivalent to α HDDs
RAID0	1	RAID1	2	Capacity remains unchanged.
RAID0	x	RAID5	x+α	Capacity increased: equivalent to α-1 HDDs
RAID0	x	RAID6	x+α (α=2 or more)	Capacity increased: equivalent to α-2 HDDs
RAID1	2	RAID0	2+α	Capacity increased: equivalent to α+1 HDDs
RAID1	2	RAID5	2+α	Capacity increased: equivalent to α HDDs
RAID1	2	RAID6	2+α	Capacity increased: equivalent to α-1 HDDs
RAID5	x	RAID0	x+α	Capacity increased: equivalent to α+1 HDDs
RAID5	x	RAID5	x+α	Capacity increased: equivalent to α HDDs
RAID5	x	RAID6	x+α	Capacity increased: equivalent to α-1 HDDs
RAID6	x	RAID0	x+α	Capacity increased: equivalent to α+2 HDDs
RAID6	x	RAID5	x+α	Capacity increased: equivalent to α+1 HDDs
RAID6	x	RAID6	x+α	Capacity increased: equivalent to α HDDs

Note *the following for the Reconstruction:*

- *Be sure to make a backup copy of the data and to perform a Consistency Check before starting the Reconstruction.*
- *The Reconstruction is disabled in a configuration where several virtual disks are defined in one disk group*
- *During the Reconstruction, the processing rate is decreased due to the high load.*
- *The Reconstruction can be performed for the degraded or partially degraded virtual disk. However, we recommend you first execute a Rebuild to recover the virtual disk, then execute Reconstruction.*
- *During the Reconstruction, do not shutdown or reboot the server. If the server is shutdown by an unforeseen accident such as power interruption, power on again as soon as possible. The Reconstruction restarts automatically.*
- *In some configurationa, the Background Initialize may start automatically once the Reconstruction is completed.*

Ex: Migration with addition for a RAID5 virtual disk

The figure below shows the addition of a single 36GB HDD to a RAID5 virtual disk configured with three 36GB HDDs.

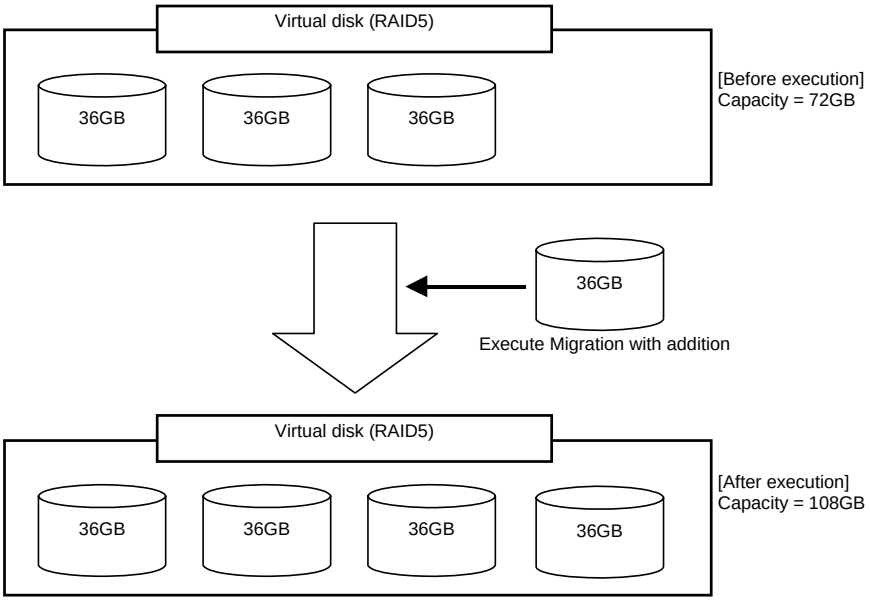

Before Using WebBIOS

Supported Functions

- Indication of model name and capacity of a hard disk drive (called HDD hereafter)
- Indication of the HDD allocation status

- Creation of virtual disks
  - RAID level Settings
  - Stripe Block size Settings
  - Read Policy/Write Policy/IO Policy Settings
- Indication of the configuration information and status of the virtual disk
- Virtual Disk removal
- Configuration clearing
- Initialization
- Consistency Check
- Manual Rebuild
- Reconstruction

Notes on when creating a Virtual Disk

- The HDDs configuring the disk group should have the same capacity and rotation speed.
- Be sure to execute a Consistency Check after the VD creation.
- When installing an OS in VD under the Internal RAID Controller, create a VD dedicated to the OS installation.
- WebBIOS cannot be handled via the remote console functions of NEC DianaScope.
- The physical drive numbers shown in WebBIOS and those shown in the Universal RAID Utility are identified as follows.

  - WebBIOS

  Enclosure number and Slot number shown in the Physical Drives box*

  *"X:X:X" shown in the Physical Drives box represents the Connector number:Enclosure number:Slot number.

    - The Connector number is not supported on this server, thus, it is always indicated as "()".
    - The Enclosure Number is always "1".
    - The Slot number represents a slot number of disk bay.

  - Universal RAID Utility

  The Enclosure number and Slot number are shown in the Physical Device Properties

Note that the slot numbers shown in Physical Drives box of WebBIOS start from 0, whereas those in the Universal RAID Utility start from 1.

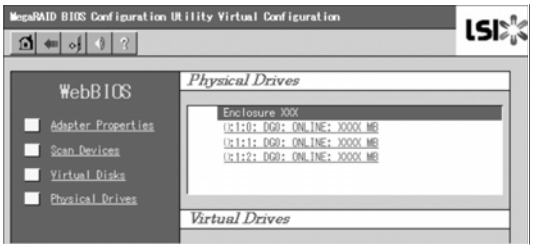

Figure 45: Physical Drives View of WebBIOS

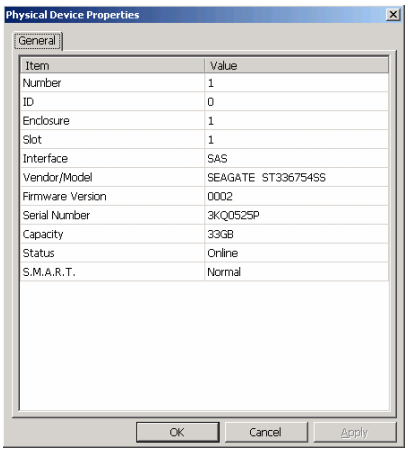

Figure 46: Physical Device Properties in the Universal RAID Utility

Using WebBIOS

Starting WebBIOS

1. Power on the server and press **Esc** when a full-screen logo is displayed.
2. Press **Ctrl** + **H** on the POST screen to start WebBIOS.

LSI MegaRAID SAS-MFI BIOS Version XXXX (Build MMM DD, YYYY)
Copyright (c) xxxx LSI Corporation
HA -X (Bus X Dev X) MegaRAID SAS PCI 8708EM2
FW package: X.X.X-XXXX

X Logical Drive(s) found on the host adapter.
X Logical Drive(s) handled by BIOS
Press <Ctrl> <H> for WebBIOS

⚠ Caution

- Do not press unnecessary keys, such as **Pause** during POST.
- If you fail to press **Ctrl** + **H** and the system proceeds without displaying the WebBIOS main menu (shown on the next page), reboot the system, and press **Ctrl** + **H** on the POST screen.

Main Menu

The screen shown below is the [Adapter Selection] screen that appears first on WebBIOS. Select a controller to operate WebBIOS, and click [Start].

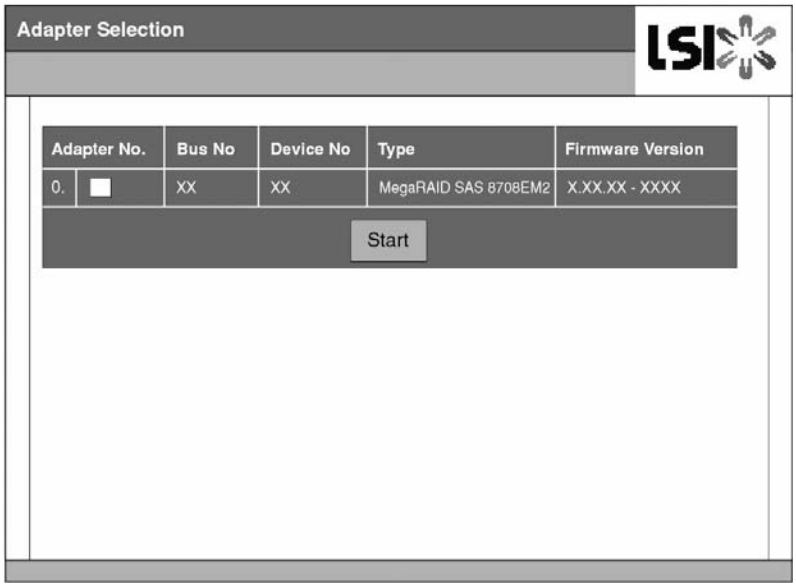

Figure 47: Adapter Selection Screen

The WebBIOS Top Menu appears.

Figure 48: WebBIOS Top Menu Screen

⚠ Caution

"X:X:X" shown in Physical Drives box represents Connector number:Enclosure number:Slot number. With this server, the Connector number is not supported, thus, it is always indicated as "()". The Enclosure number is always "1". The Slot number represents a slot number of disk bay.

Adapter Properties

When you click [Adapter Properties] on WebBIOS Top Menu, the configuration information is displayed.

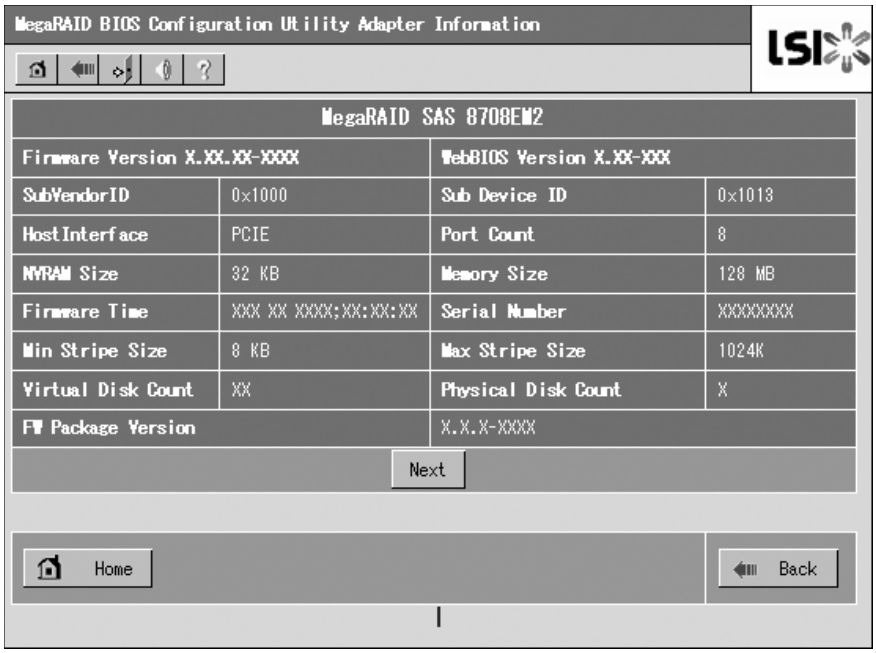

Figure 49: Configuration Information Screen

Click [Next] to see the detailed settings of this controller.

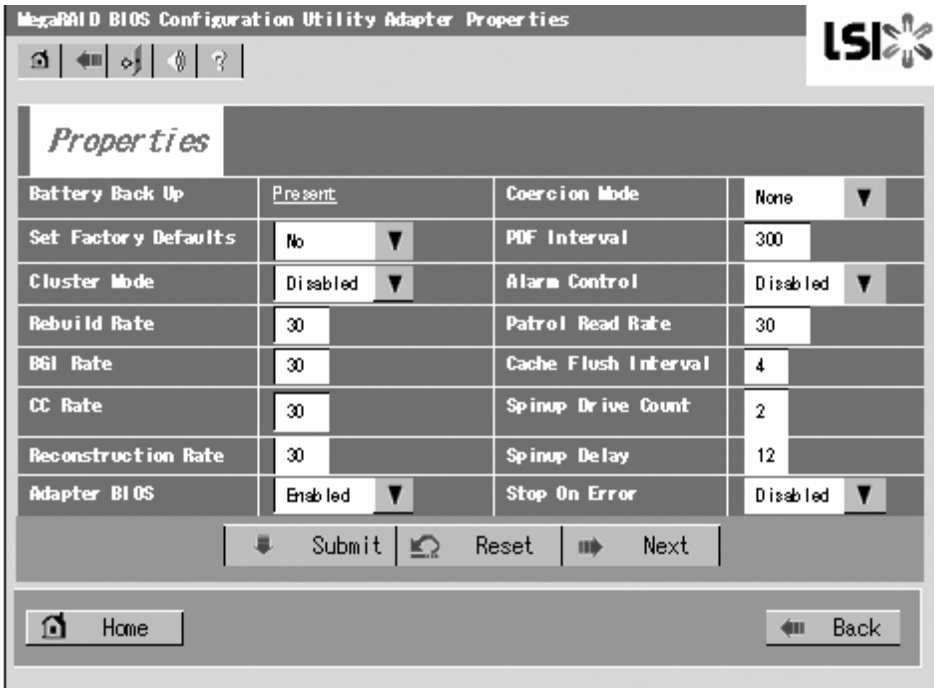

Figure 50: Detailed Controller Settings Screen (1)

The detailed settings continues on the next page. Click [Next] to view more information.

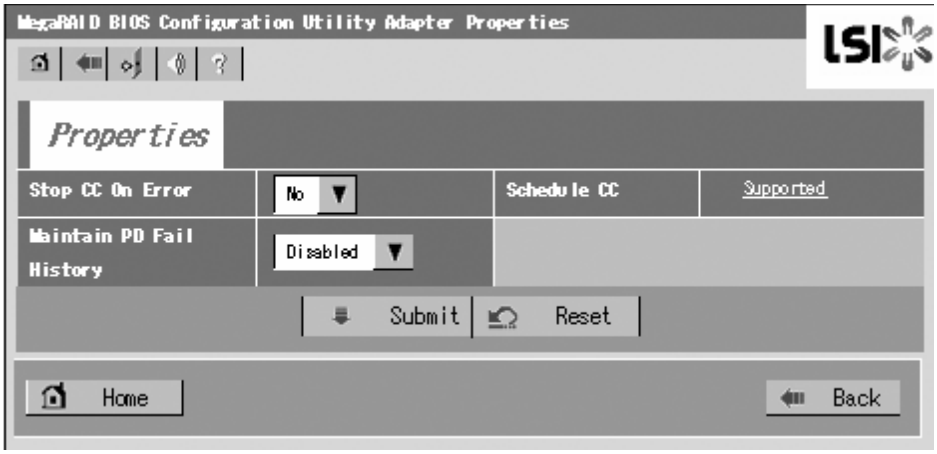

Figure 51: Detailed Controller Settings Screen (2)

Table 27: Default settings and their explanation

Item	default	Description	Change
Battery Backup	Present None	Displays Properties. When battery is installed: Present When battery is not installed: None	–
Set Factory Defaults	**No** Yes	Restores vendor's factory defaults.	Prohibited *1
Cluster Mode	Disabled	–	Prohibited
Rebuild Rate	30	Recommended value: 30	Permitted
Patrol Read Rate	30	Recommended value: 30	Permitted
BGI Rate	30	Recommended value: 30	Permitted
CC Rate	30	Recommended value: 30	Permitted
Reconstruction Rate	30	Recommended value: 30	Permitted
Adapter BIOS	**Enabled** Disabled	–	Prohibited
Coercion Mode	**None** 128MB-way 1GB-way	–	Prohibited
PDF Interval	300	–	Prohibited
Alarm Control	**Disabled** Enabled Silence	Disabled:Does not issue an alarm.	Prohibited *2
Cache Flush Interval	4	–	Prohibited
Spinup Drive Count	2	–	Prohibited
Spinup Delay	12	–	Prohibited
StopOnError	**Disabled** Enabled	–	Prohibited
Stop CC On Error	**No** Yes	Specify the operation at error detection in Consistency Check. No: Recover and resume. Yes: Abort	Permitted
Maintain PD Fail History	**Disabled** Enabled	–	Prohibited
Schdule CC	Supported	Set the scheduled Consistency Check.	Permitted

*1Do not perform "Set Factory Defaults". If performed, the factory-set values can no longer be restored.

Changing the Settings

On the [Adapter Properties] screen, change a parameter to desired value, and then click [Submit] at the center of the screen.

The "Battery Backup" status is "Present". Clicking [Present] opens the Battery Status screen as shown below.

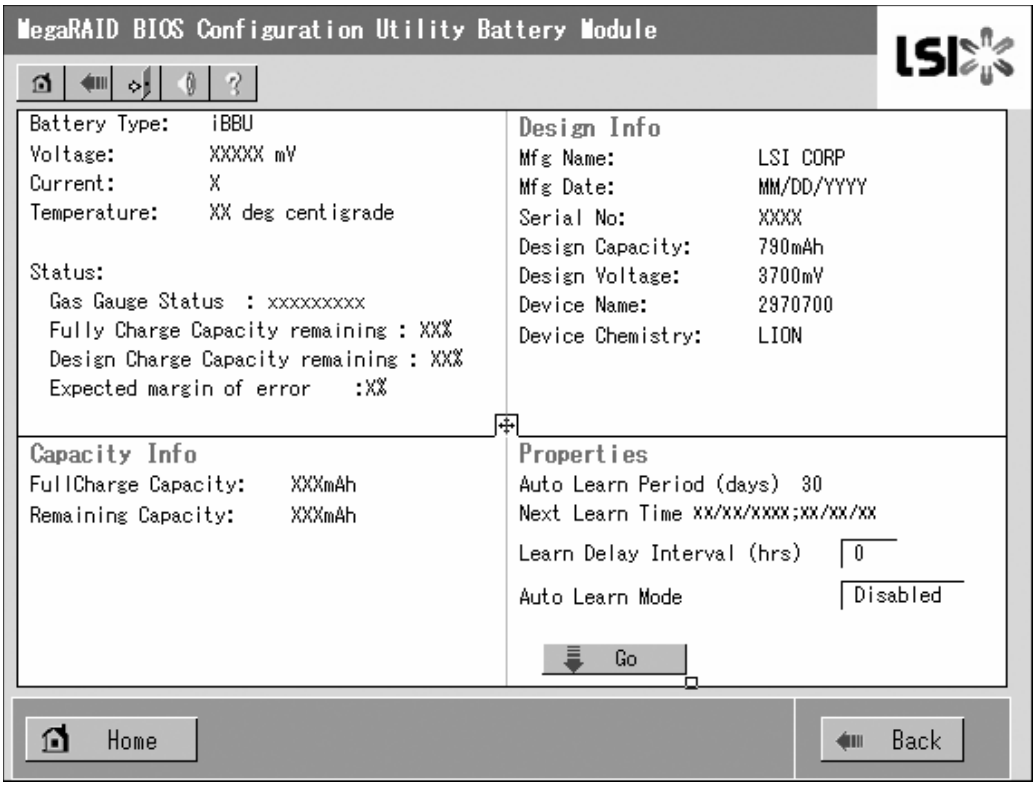

Figure 52: Battery Status Screen

Warning

You cannot change the values for the "Auto Learn Period", "Next Learn Time", and "Learn Delay Interval".

***Notes**:*

- *The Status field shows "Charging" when the battery is being charged. It shows "Discharging" when the battery is being discharged.*
- *When powering on the server after the battery replacement, the Status may not immediately change to "Charging". In that case, power on the server for several hours, and check the "Status" again.*

Scan Devices

When you click [Scan Devices] on WebBIOS Top Menu, the HDDs connected are detected again. Use this feature when you have installed a new HDD while WebBIOS is running.

⚠ Caution

- If the newly connected HDD contains another configuration information, the [Foreign Configuration] screen shown below appears. To use the HDD as new one, click [Clear] to clear the configuration information in HDD.

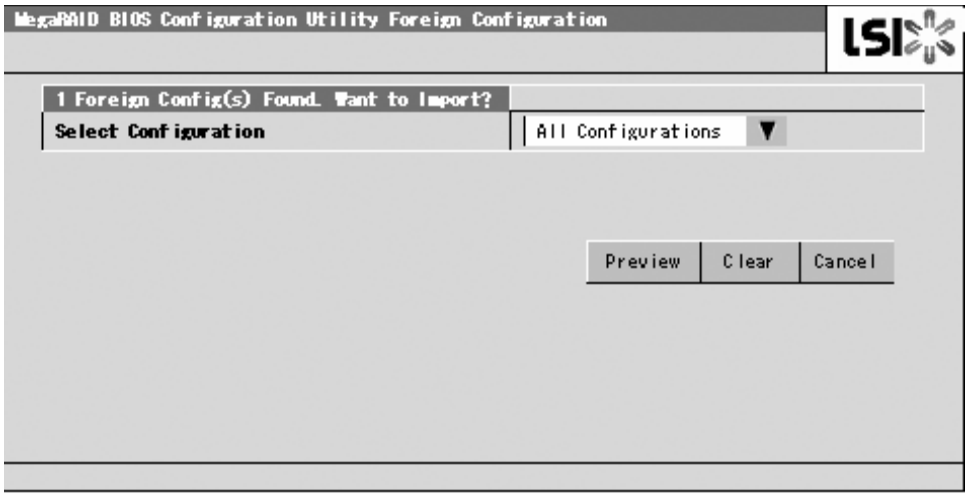

Figure 53: Foreign Configuration Screen

- If you use the Universal RAID Utility to configure a RAID system using the newly connected HDD containing another configuration information, first clear any other configuration information using this Scan Devices feature.

Virtual Disks

When you click [Virtual Disks] on the WebBIOS Top Menu, the screen for operating the VD that has already been configured is displayed.

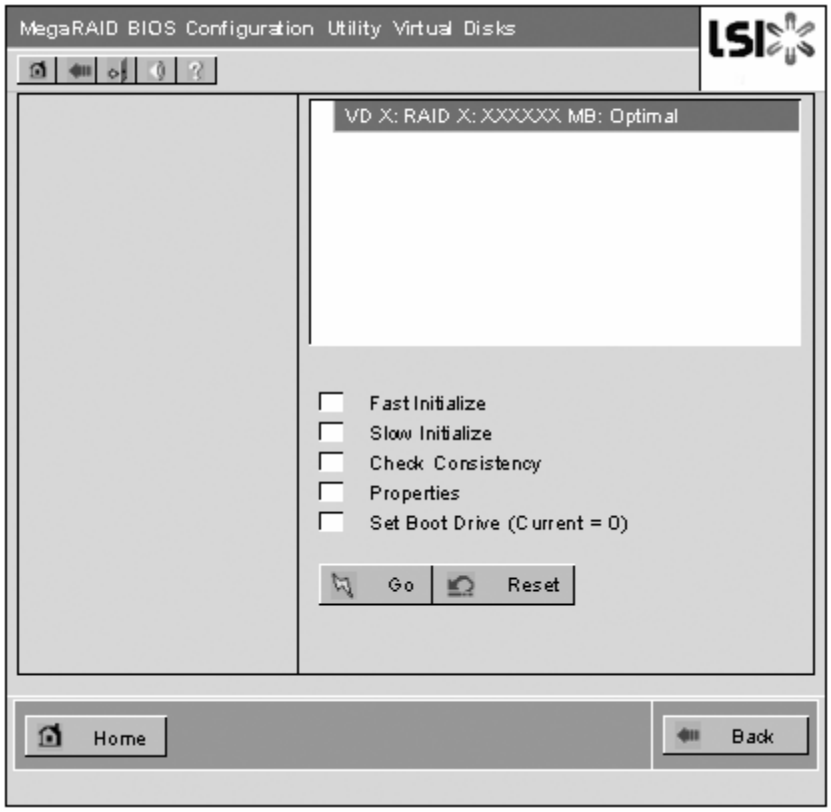

Figure 54: Virtual Disks Operation Screen

⚠ Caution

If no virtual disk exists, the upper right column of the screen will be blank. Use this menu only when a virtual disk exists.

Physical Drives

When you click [Physical Disks] on the WebBIOS Top Menu, the screen for operating the physical drive (HDD) appears.

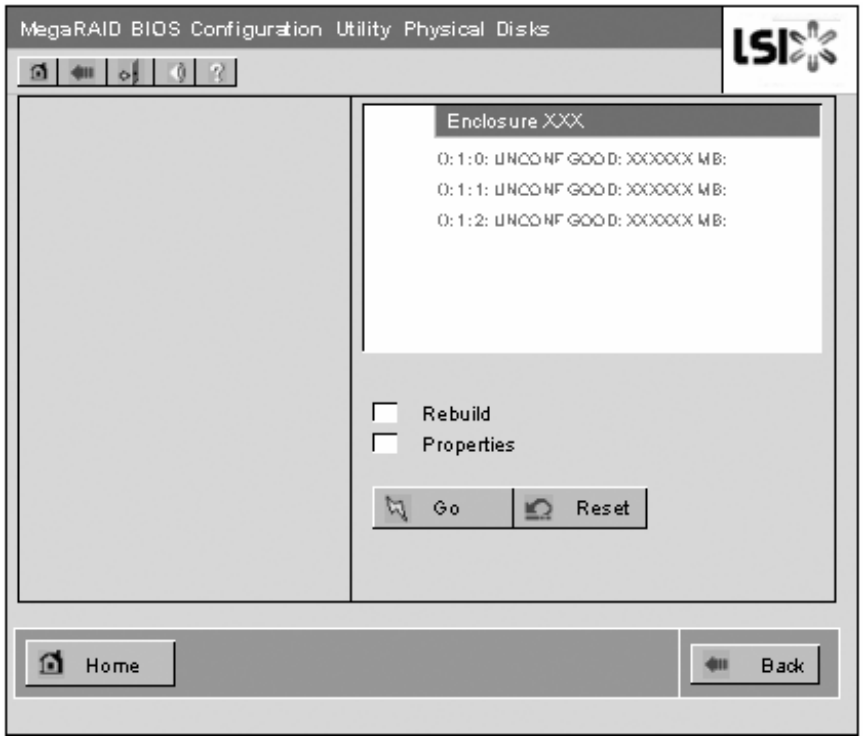

Figure 55: Physical Drive Operation Screen

⚠ Caution

If no hard disk drive exists, the upper right column of the screen will be blank. Use this menu only when a hard disk drive exists.

Physical Drives Properties

Follow the procedure below to check the Physical Drive Properties. The example shown below is an example to check the properties of the physical drive 0:0:0.

1. Click on the Physical Drive you want to check.
2. Click the checkbox for [Properties].
3. Click [Go].

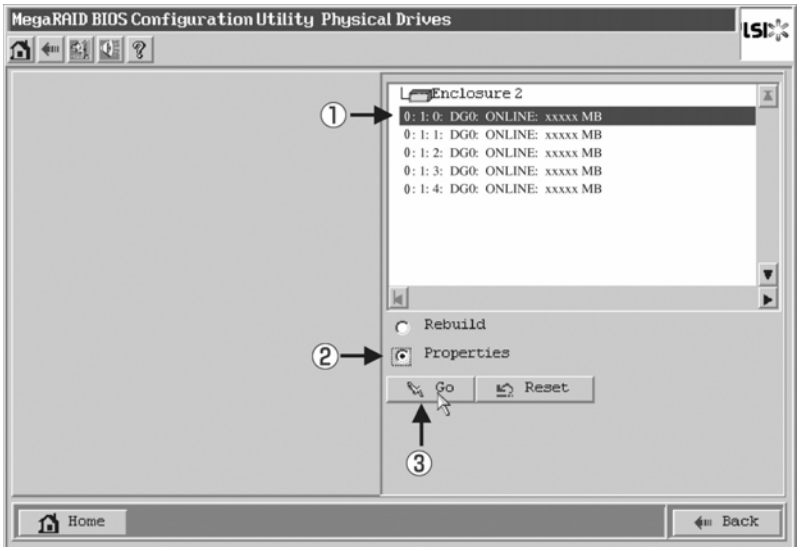

Figure 56: Physical Drives Properties Screen (1)

The Properties screen shown below appears.

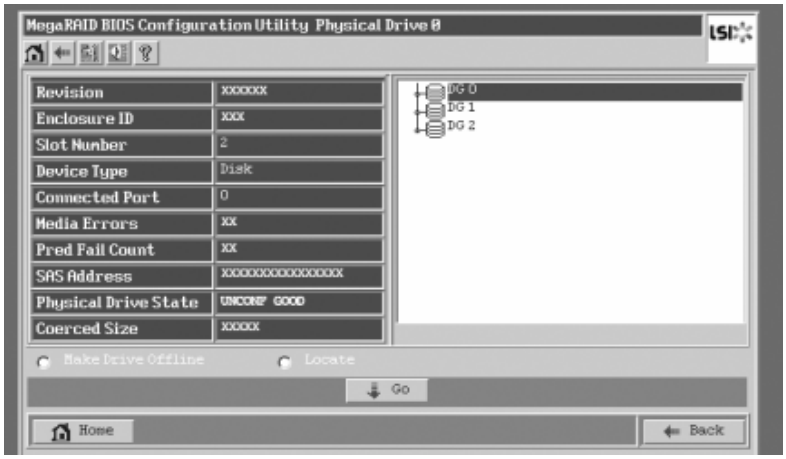

Figure 57: Physical Drives Properties Screen (2)

Configuration Wizard

Use this wizard to configure a RAID system using the connected HDDs. The detailed explanation of this feature is given in "Configuring Virtual Disk".

Adapter Selection

Click [Adapter Selection] on the WebBIOS top menu to open the [Adapter Selection] screen.

Physical View / Logical View

If a virtual disk has been configured using the RAID Controller, DG (disk group) is displayed on WebBIOS Top Menu. Clicking [Physical View] displays information for the HDDs in the DG.. Clicking [Logical View] displays the virtual disk in the DG.

Events

The Events screen is used to confirm the system events.

⚠ Caution

The Internal RAID Controller does not support the Events feature.

Exit

When you click [Exit] on the WebBIOS Top Menu, a confirmation screen to exit from WebBIOS is displayed. Click [Yes] to exit from WebBIOS.

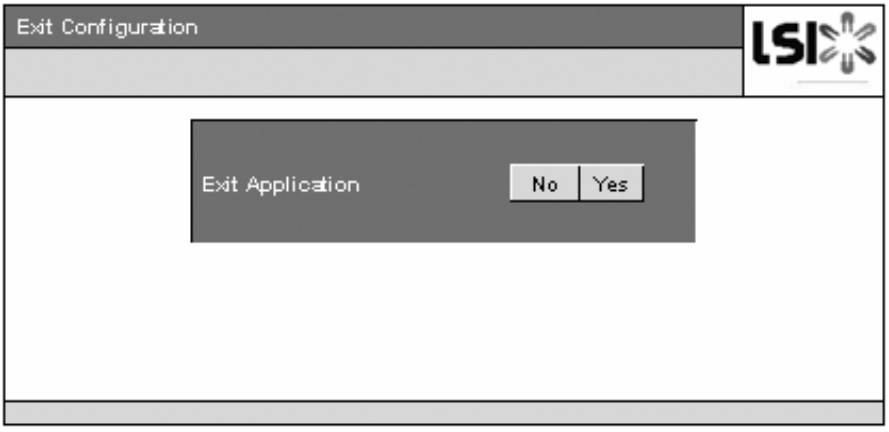

Figure 58: WebBIOS Exit Screen (1)

the screen shown below is displayed when WebBIOS is terminated. Restart the server.

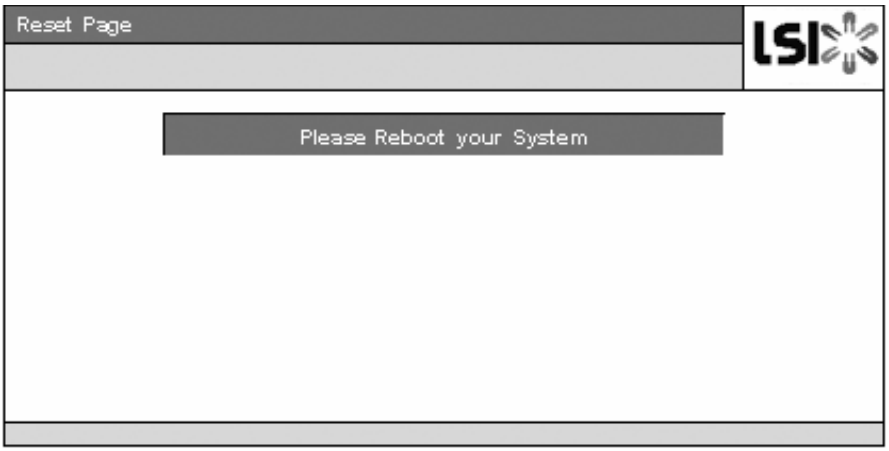

Figure 59: WebBIOS Exit Screen (2)

Configuring a Virtual Disk

This section describes the procedures for the configuration of a VD (virtual disk) using WebBIOS.

Configuration Wizard

When you click [Configuration Wizard] on the WebBIOS Top Menu, the screen shown below is displayed. Select the relevant operation, and click [Next] at lower right of the screen.

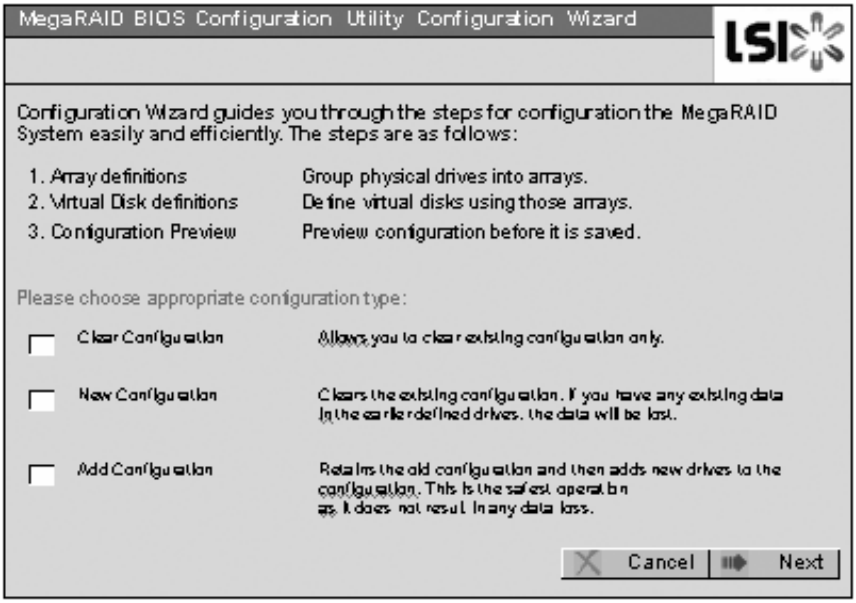

Figure 60: Configuration Wizard Screen (1)

Clear Configuration	Allows you to clear existing configuration.
New Configuration	Clears the existing configuration and creates a new VD. If you have any existing data in the virtual disk defined earlier, the data will be lost.
Add Configuration	Retains the old configuration and then adds a new virtual disk.

When you select [New Configuration] or [Add Configuration], the screen shown below is displayed.

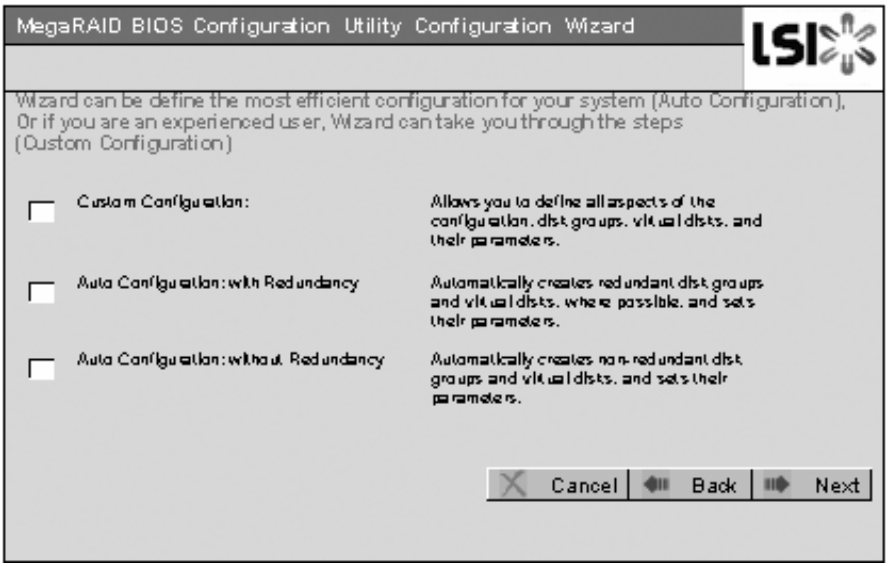

Figure 61: Configuration Wizard Screen (2)

Custom Configuration:	Allows you to define all aspects of the configuration, RAID level, size, and others.
Auto Configuration with Redundancy:	Automatically creates a redundant virtual disk.
Auto Configuration without Redundancy:	Automatically creates a non-redundant virtual disk.

⚠ Caution

The Internal RAID Controller only supports "Custom Configuration".

Use this menu to define several physical drives (PD) as a disk group (DG).

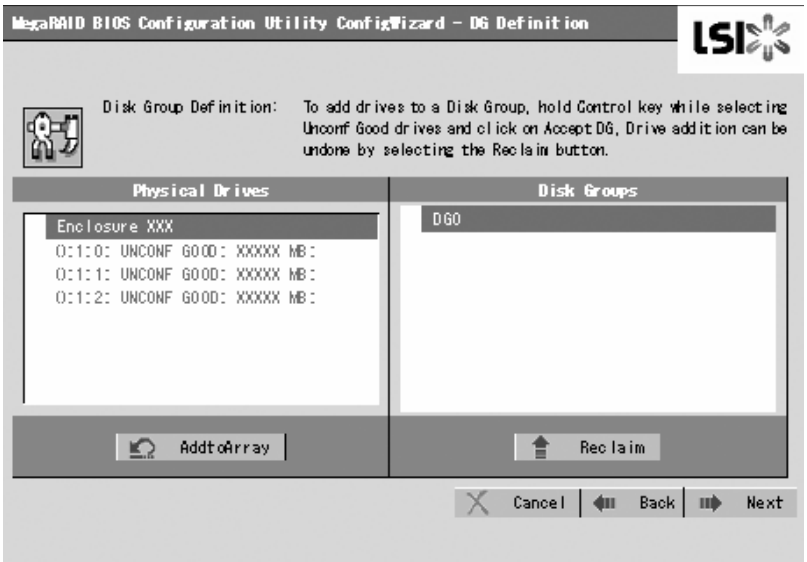

Figure 62: Configuration Wizard Screen (3)

1. To add physical drives (HDD) to a Disk Group, hold **Ctrl** while selecting physical drives (HDDs) in DG.

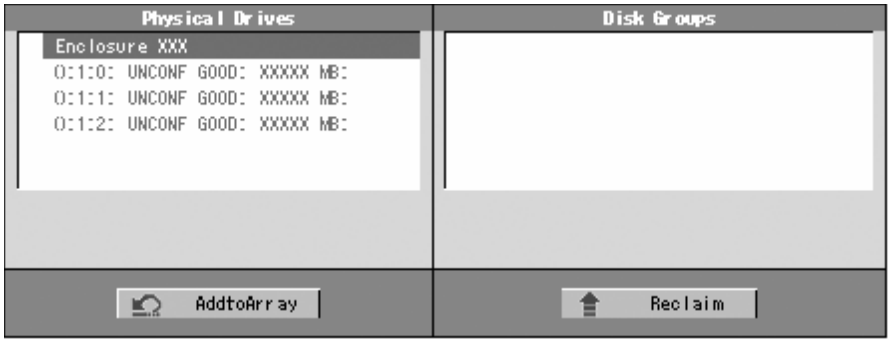

Figure 63: Configuration Wizard Screen (4)

2. Once the selection is completed, click [Add to Array].

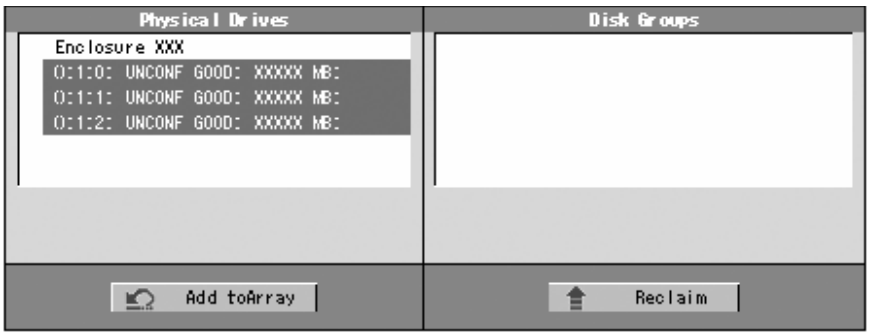

Figure 64: Configuration Wizard Screen (5)

3. A new DG is defined in the Disk Groups frame.
   To define the new DG, click [Accept DG].

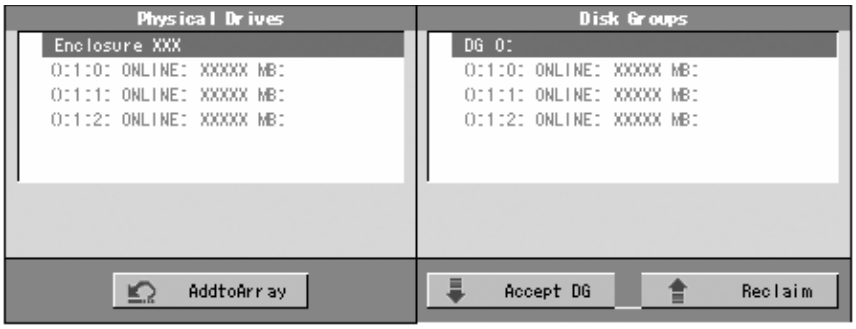

Figure 65: Configuration Wizard Screen (6)

4. Once the DG has been defined, click [Next].

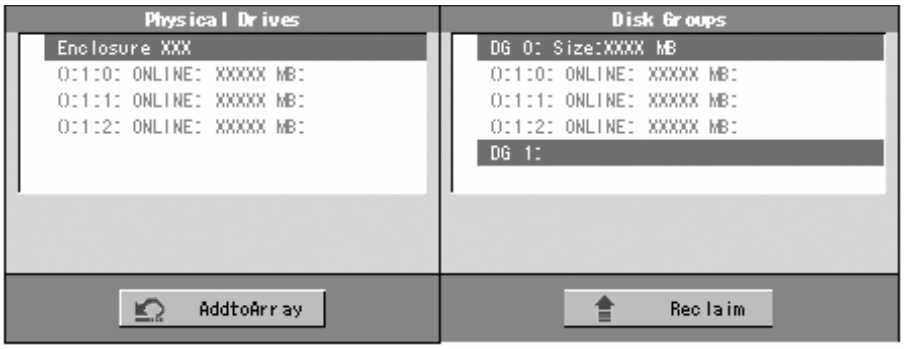

Figure 66: Configuration Wizard Screen (7)

5. Then, the Span Definition screen appears.

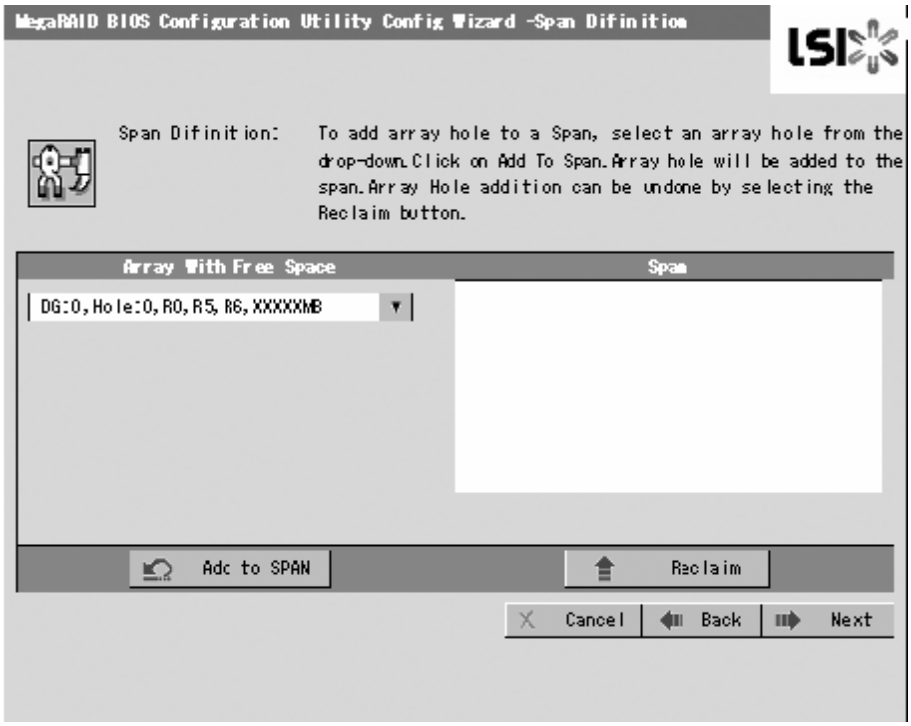

Figure 67: Configuration Wizard Screen (8)

6. Select a DG to define a VD from "Array With Free Space" frame, then click [Add to SPAN]. The DG is defined in the "Span" field to the right.

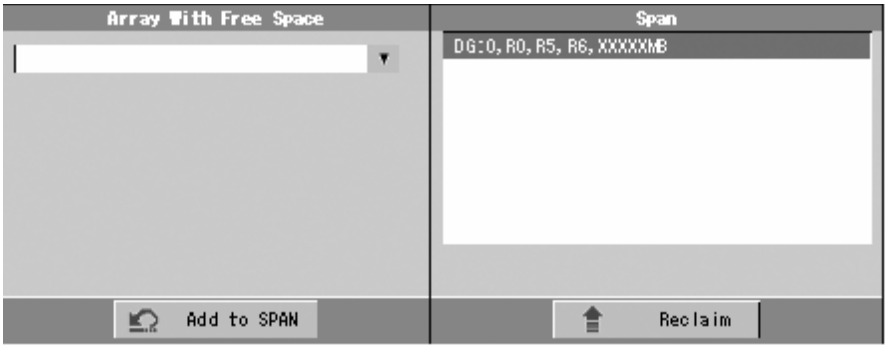

Figure 68: Configuration Wizard Screen (9)

7. Once the Span has been defined, click [Next].

⚠ Caution

- To configure RAID0, 1, 5, or 6, perform Span Definition to a single DG only. If you need to perform Span Definition to several DGs, define VD for the first DG, then select the next DG to define VD.
- Span Definition cannot be performed to DGs containing the different number of HDDs.

Define the virtual disk (VD) in DG that has been created in the previous step. When DG was defined, the [VD Definition] screen is displayed. In the "Next

LD, Possible RAID Levels" column, the available RAID levels and maximum size for the VD are displayed.

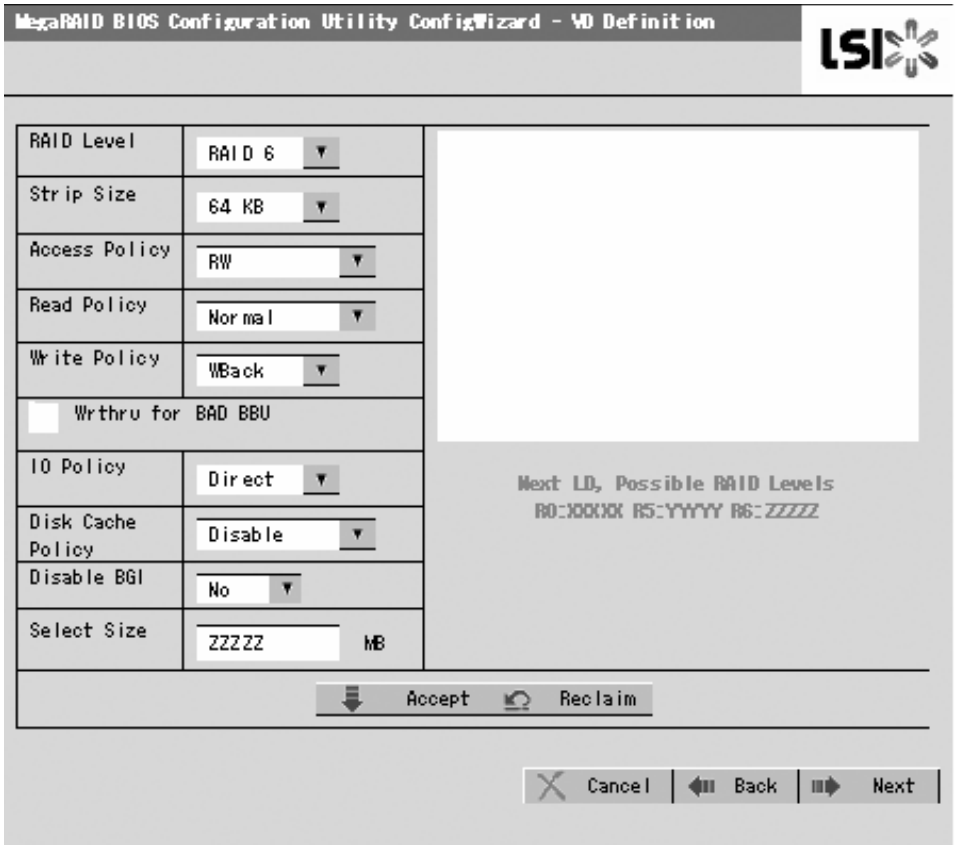

Figure 69: Configuration Wizard Screen (10)

As an example, define a RAID5 VD of yyyyy MB.

1. Specify the necessary parameters in left columns.
2. Enter "yyyyy" in "Select Size" field.
3. Click [Accept] at the lower center of the screen.
4. If you want to define another VD, click [Back] and repeat the steps starting from the Span Definition screen.
5. When the VD is defined, click [Next].

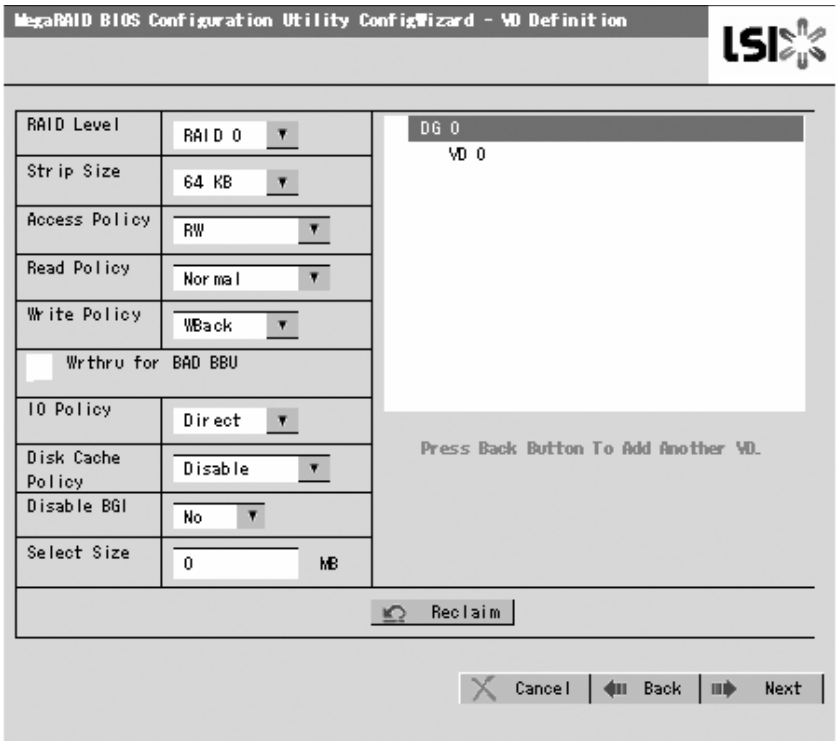

⚠ Caution

- The value shown in "Select Size" indicates the maximum size allowed for RAID1 or RAID6. You need to specify the maximum size for RAID0 or RAID5 according to "Next LD, Possible RAID Levels".
- To use RAID 5 or RAID 6 with Internal RAID Controller, you need to install the optional RAID Upgrade Kit.
- If the RAID Upgrade Kit is not installed, do not select "RAID5" that may appear in [RAID Level] box. If selected, you will fail to save the configuration information. In such a case, you need to define a VD again from the beginning.

6. The VD 0 is created in the DG 0 as shown in the screen below.

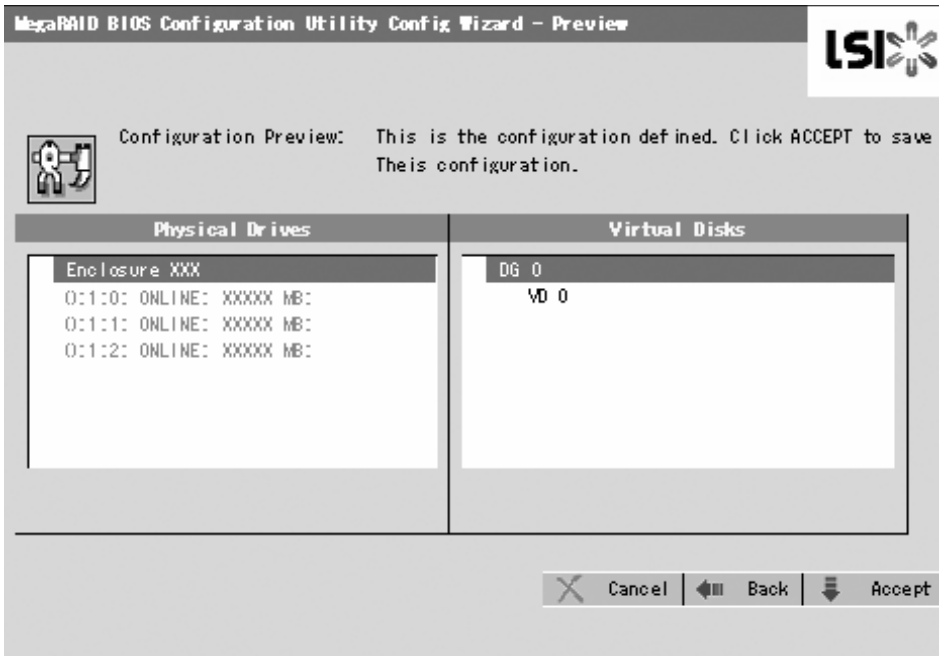

Figure 70: Virtual Disk Creation

7. Make sure that the VD is created correctly, and click [Accept] at the lower right of the screen.
8. The confirmation message "Save this Configuration?" appears. Click "Yes" to save the configuration.
9. The confirmation message "All data on the new Virtual Disks will be lost. Want to Initialize?" appears. Select "Yes".
10. The "Virtual Disks" operation screen is displayed. If no other operation is required, click [Home].

11. The WebBIOS Top Menu is displayed. The Virtual Disk you have created is displayed in the lower right frame of the screen.

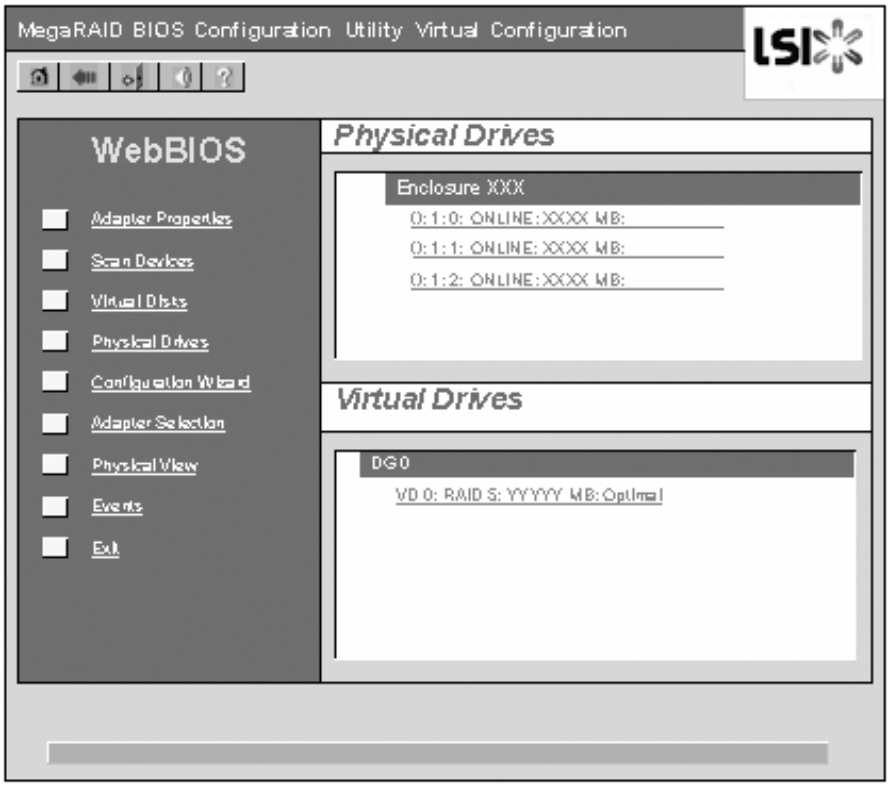

Figure 71: WebBIOS Top menu

Configuring a SPAN

The following explains the procedure to configure a RAID10 (spanning of RAID1) with four HDDs.

⚠ Caution

Do not attempt to configure RAID00 or RAID60. They are not supported.

1. Click the [Configuration Wizard] on the WebBIOS Top Menu.

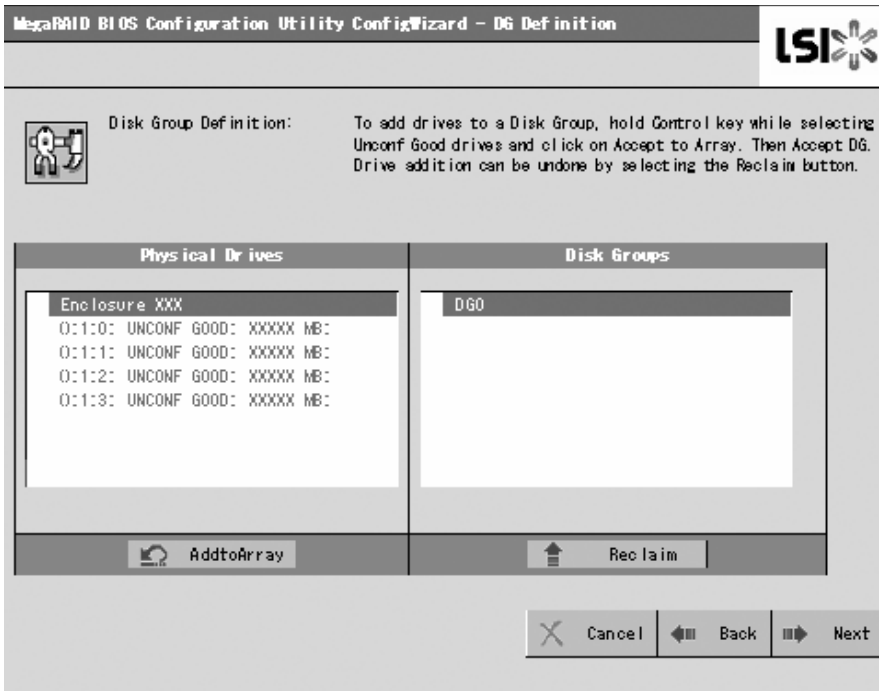

Figure 72: Span Configuration Wizard (1)

2. To add physical drives (HDD) to a Disk Group, hold **Ctrl** while selecting the HDDs in the DG. (In the example, two DGs will be configured and spanned.)

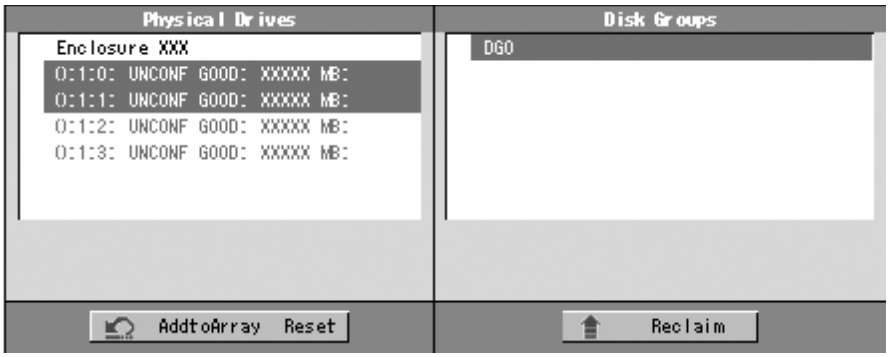

Figure 73: Span Configuration Wizard (2)

3. Upon completion of selection, click [Add to Array] at the lower right of the screen. Make sure that the new DG is defined in the Disk Groups frame to the right, click [Accept DG].

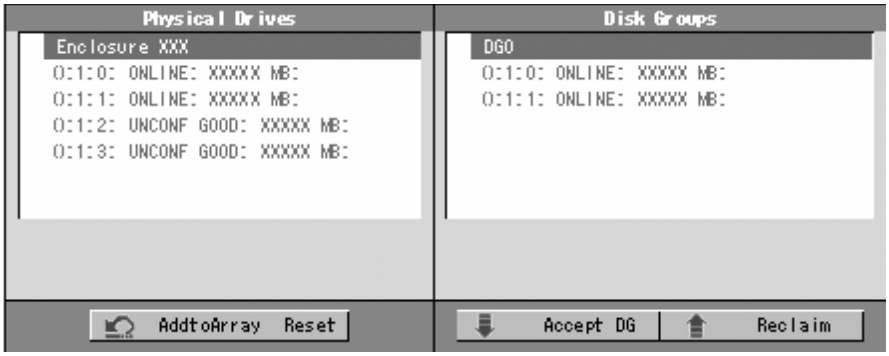

Figure 74: Span Configuration Wizard (3)

4. A new DG is defined in the Disk Groups frame. Define another DG in the similar procedures. Once the DGs have been defined, click [Next] at the lower right of the screen.

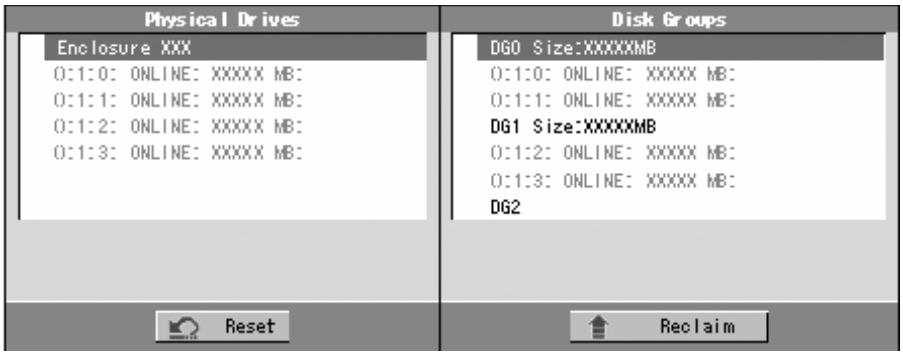

Figure 75: Span Configuration Wizard (4)

5. Configure a RAID10 (spanning of RAID1) using the two DGs that have been created in the previous step. When DGs are defined, the [VD Definition] screen is displayed.

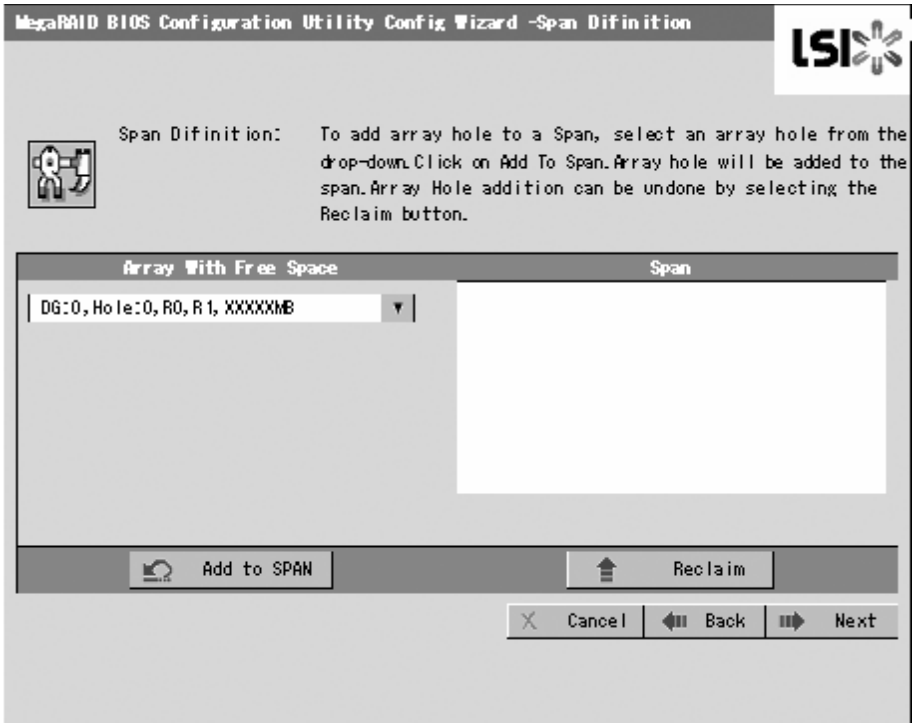

Figure 76: Span Configuration Wizard (5)

6. Select DG0 from the "Array With Free Space" frame, then click [Add to SPAN]. The DG is defined in the "Span" field to the right.

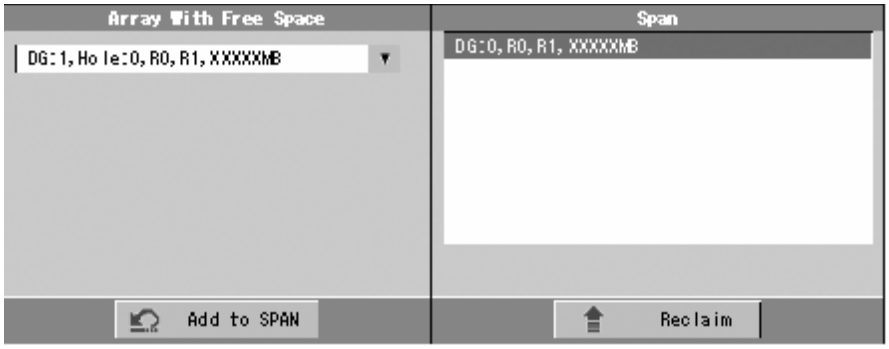

Figure 77: Span Configuration Wizard (6)

7. Select DG1 and click [Add to SPAN]. When the two DGs are defined in the "Span" field to the right, click [Next].

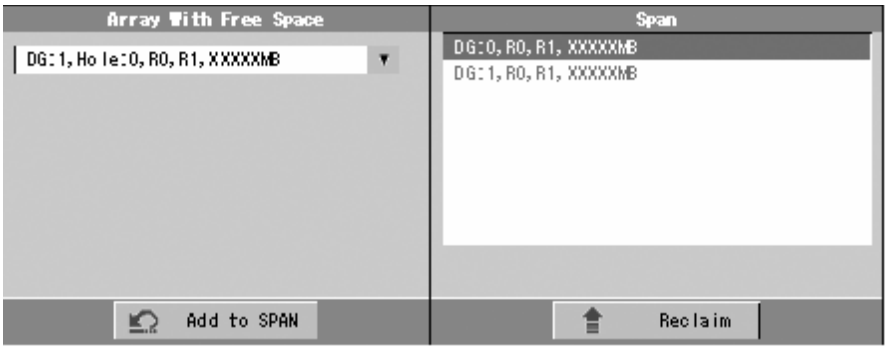

Figure 78: Span Configuration Wizard (7)

8. The VD Definition screen is displayed. Enter the necessary parameters, and click [Accept].

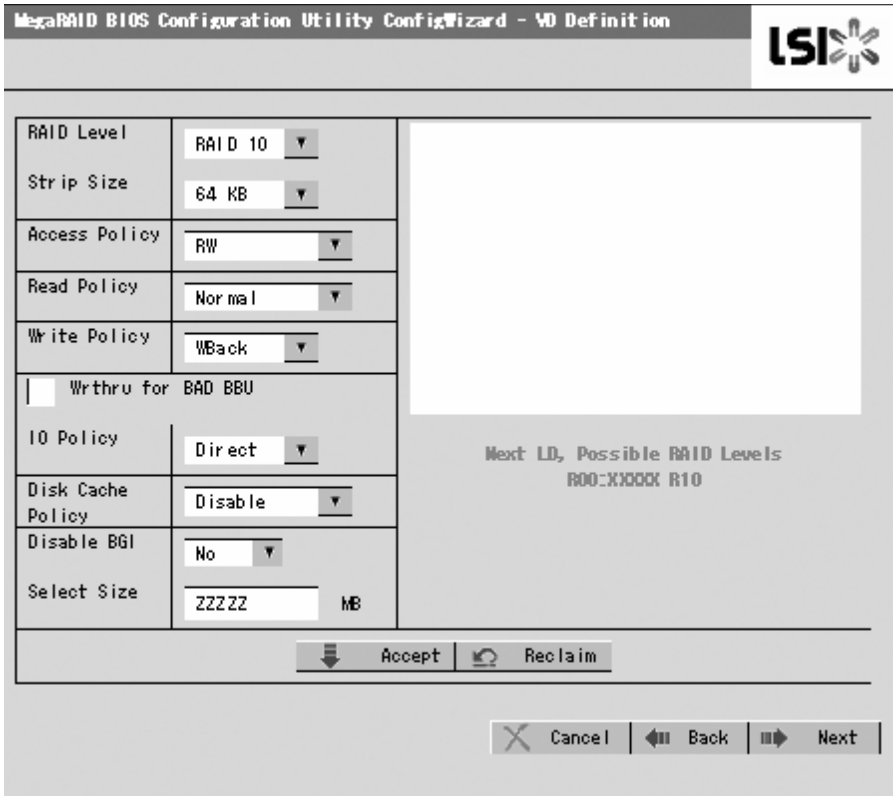

Figure 79: Span Configuration Wizard (8)

9. Make sure that both the DG0 and DG1 are defined as VD 0, then click [Next].

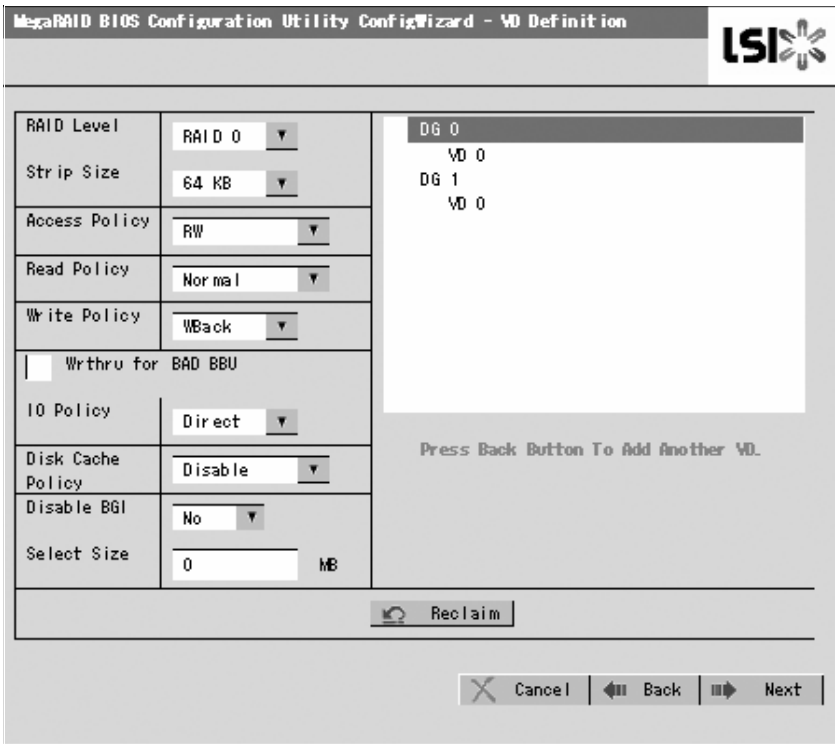

Figure 80: Span Configuration Wizard (9)

10. On the "Preview" screen, make sure that the VD is defined correctly, then click [Accept].

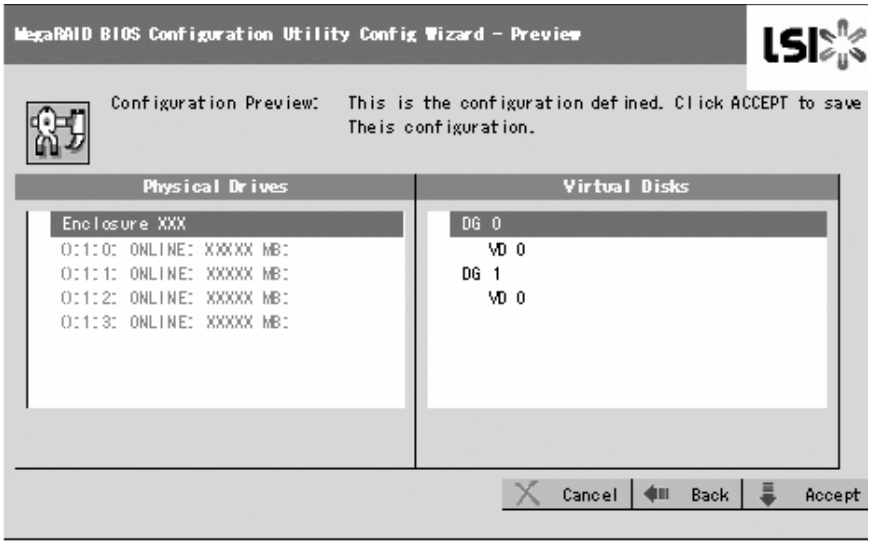

Figure 81: Span Configuration Wizard (10)

11. The confirmation message "Save this Configuration?" appears. Click "Yes" to save the configuration.

12. The confirmation message "All data on the new Virtual Disks will be lost. Want to Initialize?" appears. Normally, select "Yes".

13. The “Virtual Disks" operation screen is displayed. If no other operation is required, click [Home] at the lower left of the screen.

14. The WebBIOS Top Menu is displayed. The Virtual Disk you have created is displayed in the lower right frame of the screen.

Parameters for VD Definition

Table 28: Configuration Wizard Parameters

Item	Parameters	Remarks
RAID Level	**RAID 0** / **RAID 1** / **RAID 5** / **RAID 6** / RAID 00 / RAID 10 / RAID 50 / RAID60	RAID 00, RAID 10, RAID 50, and RAID 60 are not supported.
Strip Size	8 KB / 16 KB / 32 KB / **64 KB** / 128 KB / 256 KB / 512 KB / 1024 KB	Recommended value: 64KB
Access Policy	**RW** / Read Only / Blocked	Recommended value: RW
Read Policy	**Normal** / Ahead / Adaptive	Recommended value: Normal
Write Policy	**WBack** / **WThru**	WBack: WriteBack WThru: WriteThru
WrtThru for BAD BBU	**Checked** / Unchecked	Select a mode when WriteBack is specified for Write Policy. Checked: Normal WriteBack Unchecked: Constant WriteBack Recommended value: Checked
IO Policy	**Direct** / Cached	Recommended value: Direct
Disk Cache Policy	NoChange / Enable / **Disable**	Recommended value: Disable
Disable BGI	**No** / Yes	Specify whether to perform Background Initialize after creation of VD. Recommended value: No

⚠ Caution

- BGI (Back Ground Initialize) is available only for a RAID5 VD configured with five or more HDDs.
- To use RAID 5 or RAID 6, with an Internal RAID Controller, you need to install the optional RAID Upgrade Kit.
- If the RAID Upgrade Kit is not installed, do not select "RAID5" that may appear in [RAID Level] box. If selected, you will fail to save the configuration information. In such a case, you need to define a VD again from the beginning.

The Write Policy features the following modes to be used in combination with the WrtThru for BAD BBU. Select a mode suitable for your environment.

Table 29: Write Policy Modes

		WrtThru for BAD BBU	
		Checked	**Unchecked**
Write Policy	WBack	Normal write back mode (recommended) This mode is available only when the RAID Battery Backup Unit is installed. The controller uses cache memory for writing. However, if the battery is being charged or failed, the controller operates in WThru (write through) mode automatically. Thus, this mode can provide higher data security.	Constant write back mode This mode is available even if the RAID Battery Backup Unit is not installed. The controller always uses cache memory for writing. In this mode, the data in cache memory may not be protected from being damaged if the power failure occurs due to charge/discharge or defect of the battery. Be sure to use UPS when specifying this mode for write policy.
	WThru	Write through mode This mode is recommended when the RAID Battery Backup Unit is not installed. The controller does not use cache memory for writing data.	* This mode is unavailable. If you do not check "WrtThru for BAD BBU" at creation of VD, this item is automatically checked after the VD has been created.

You can change the parameters for the VD definition except for the RAID level and Stripe Size. On the WebBIOS Top Menu, click [Virtual Disks], specify the parameters in the "Policies" frame, and click [Change].

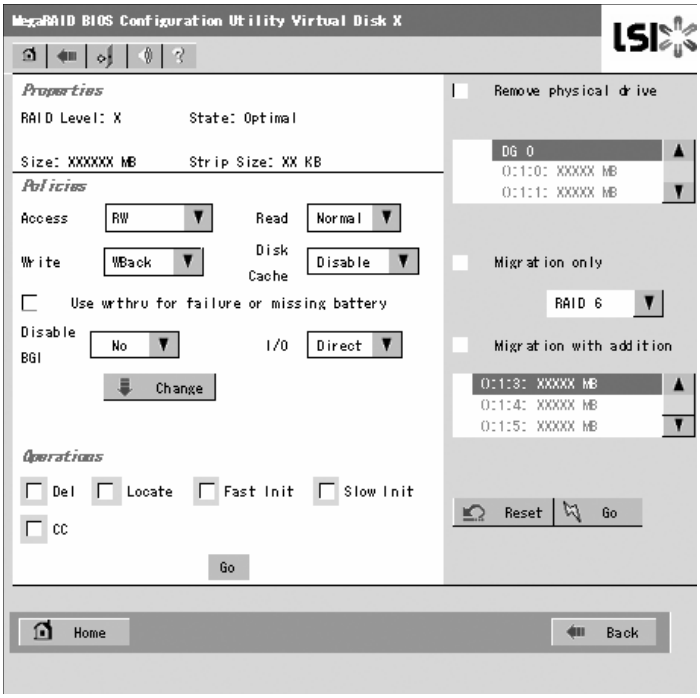

Figure 82: Virtual Disk Definition Screen

Operation of Various Features

Check Consistency

1. Start WebBIOS.
2. Click [Virtual Disks] on the WebBIOS Top Menu.
3. Select a VD to perform the Check Consistency from the upper right frame of the Virtual Disks screen.
4. Click the checkmark column for the Check Consistency from the lower right frame of the Virtual Disks screen.
5. Make sure that Check Consistency is checked, and click [Go].

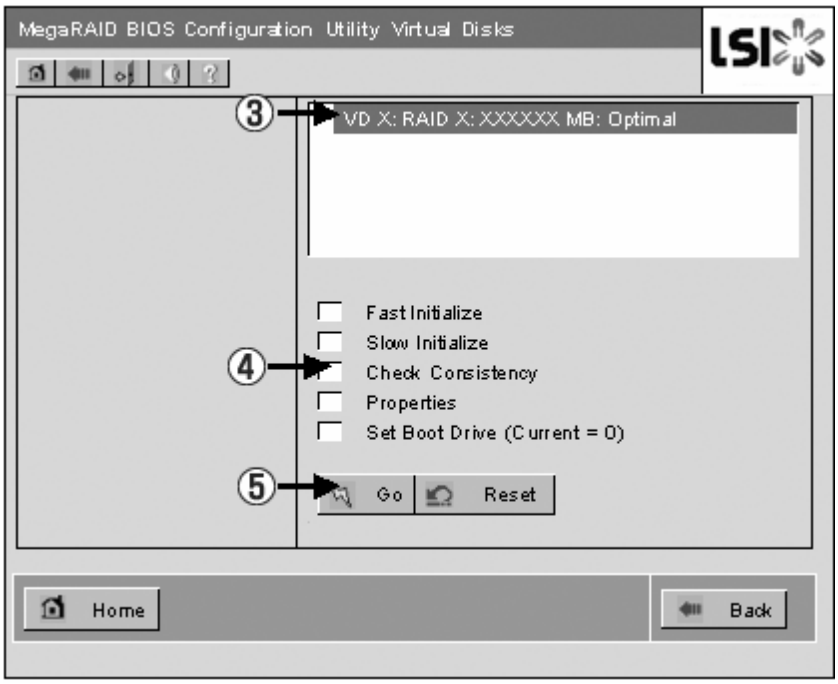

Figure 83: Check Consistency Screen

The Check Consistency progress is displayed on the left frame of Virtual Disks screen.

6. Click [Home] at the lower left of the Virtual Disks screen to return to the Top Menu.

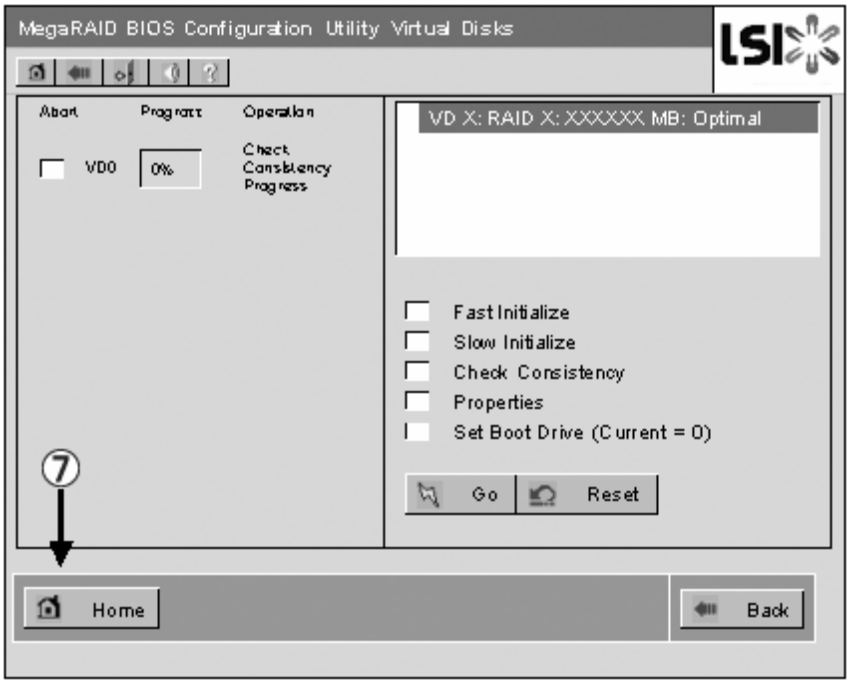

Figure 84: Virtual Disks Screen

⚠ Caution

Click [Home] while a background task such as Consistency Check, Rebuild, or Reconstruction is being executed. If the progress indication is displayed, the background task may process at a slower rate.

Manual Rebuild

The procedure below is based on the following assumption:
One of the HDDs failed in a RAID5 virtual disk configured with three HDDs.

Replace the failed HDD with a new one after turning off the power of the server. The Auto Rebuild feature is disabled for non-hot-swap replacement. Use the Manual Rebuild feature to recover the virtual disk as described below.

1. Start WebBIOS.

   Make sure that the status for the replaced HDD is indicated as "UNCONF GOOD" in the right frame of the Top Menu.

In the example below, the hard disk drive in slot number 2 has been replaced. The indication "PD Missing from DGx: Slot 2: xxxxx MB" indicates that the PD (physical drive) installed in slot number 2 was removed.

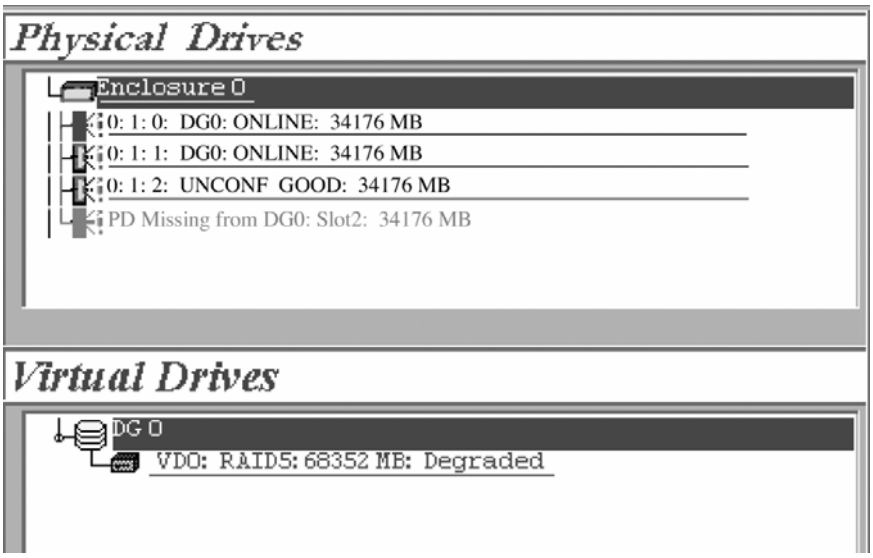

Figure 85: WebBIOS Top Menu

2. Select "():1:2" (newly connected HDD) in [Physical Drives].

The Physical Drive properties screen is displayed.

3. Select "Make Global HSP" or "Make Dedicated HSP" on the lower part of the screen, and click [Go] on the lower center of the screen.

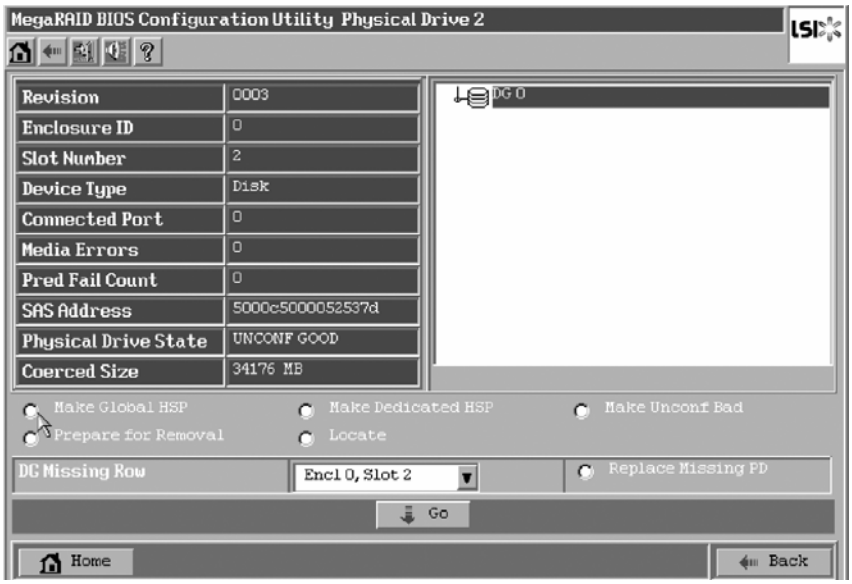

Figure 86: Physical Drive Properties Screen

4. When [Rebuild Progress] is displayed, click [Home] at the lower left of the screen to go back to WebBIOS Top Menu.

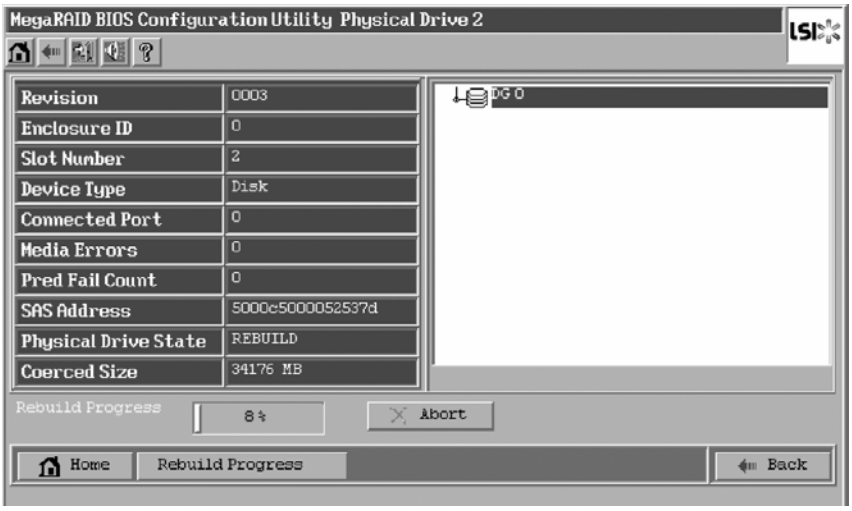

Figure 87: Rebuild Progress Screen

⚠ Caution

Click [Home] while a background task such as Consistency Check, Rebuild, or Reconstruction is being executed. When the progress indication is displayed, the background task may process at a slow rate.

Setting a Hot Spare

The procedures below are based on the following asuumption:
Add a HDD to a RAID5 virtual disk configured with three HDDs and assign a newly added HDD as Hot Spare.

1. Start WebBIOS.

   Make sure that the status for the added HDD is indicated as "UNCONF GOOD" in the right frame of the Top Menu.

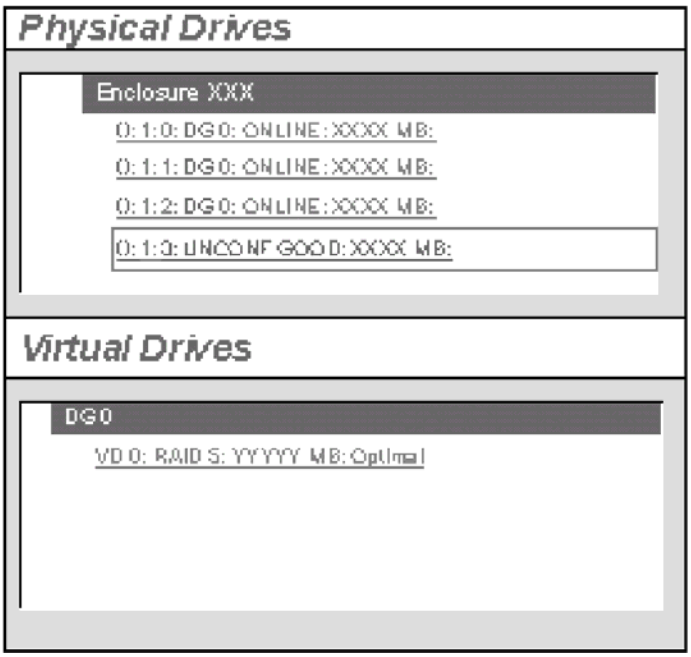

Figure 88: Top Menu Screen

2. Select "():1:3" (newly connected HDD) in [Physical Drives].
3. The Physical Drive properties are displayed.
4. Select [Make Global HSP] or [Make Dedicated HSP] on the lower right of the screen, and then click [Go] on the lower center of the screen.

Global HSP:	Indicates the Hot Spare available for all DGs.
Dedicated HSP:	Indicates the Hot Spare available only for the specific DG. You need to specify the target DG.

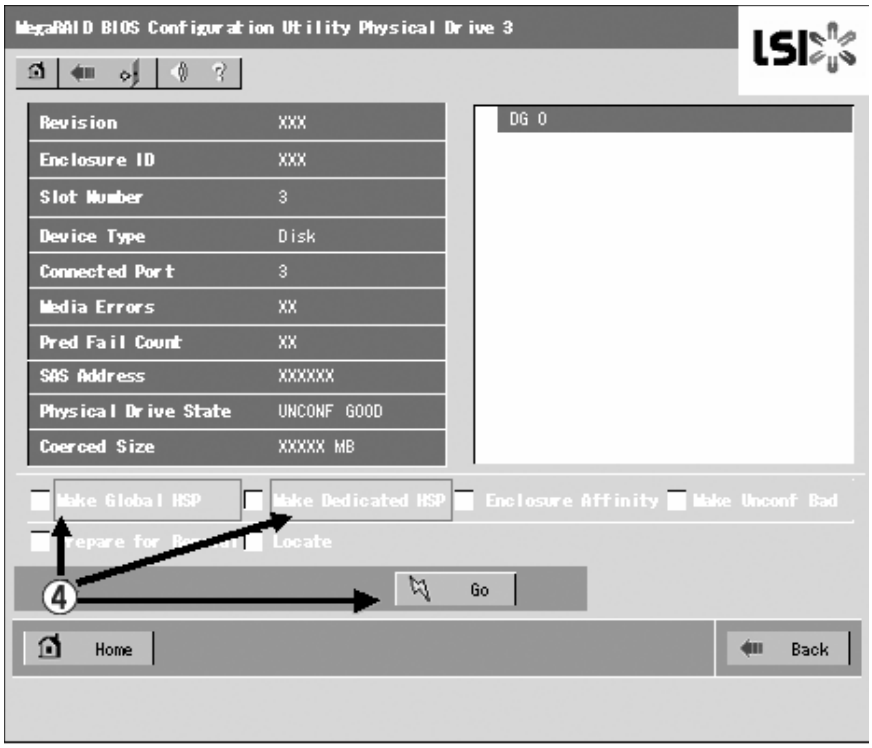

Figure 89: Physical Drive Properties Screen

Do not check "Enclosure Affinity" which defines the hot-spare to a specific enclosure. This setting is not supported in the system.

The status for the newly connected HDD changes to "HOTSPARE".

5. Click [Home] to go back to the WebBIOS Top Menu.

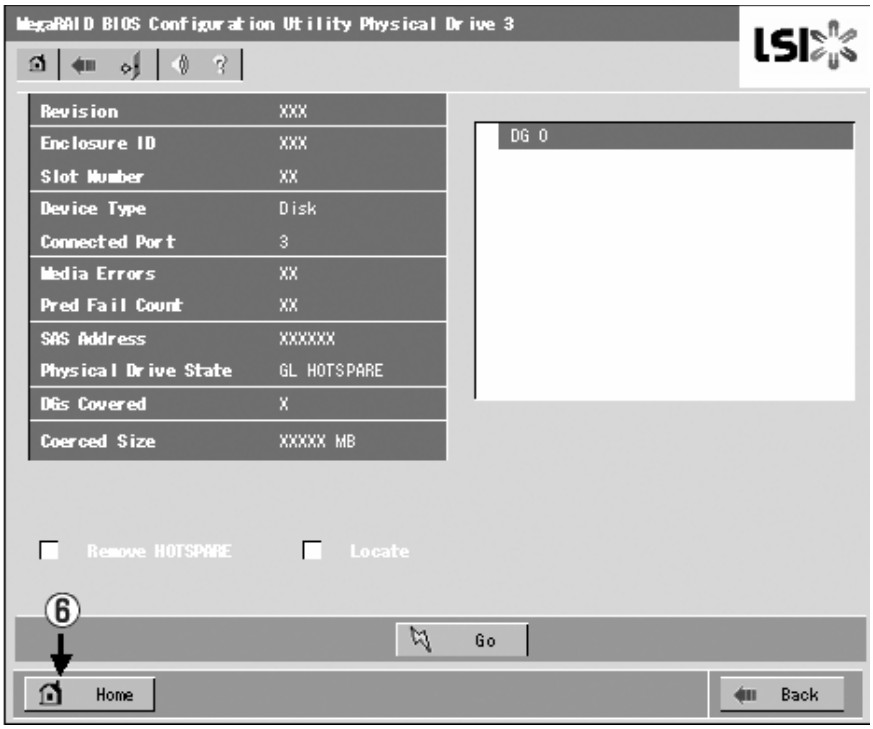

Figure 90: WebBIOS Top Menu

Reconstruction

The procedure described below is based on the following assumption:
Add a HDD to a RAID5 virtual disk configured with three HDDs to make a RAID5 virtual disk configured with four HDDs.

1. Start WebBIOS.

   Make sure that the status for the added HDD is indicated as "UNCONF GOOD" in the right frame of the Top Menu.

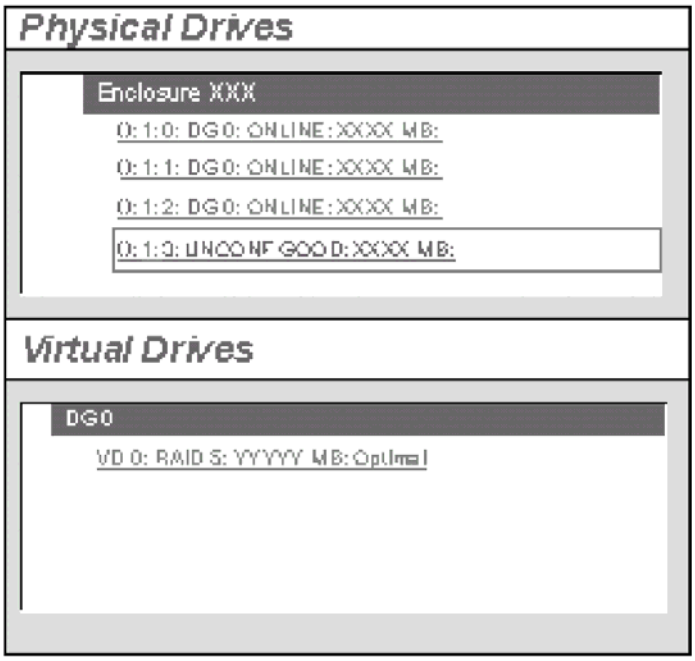

Figure 91: Top Menu Screen

2. Select "VD 0" (already been constructed) in [Virtual Drives].

3. The VD 0 Settings menu is displayed.

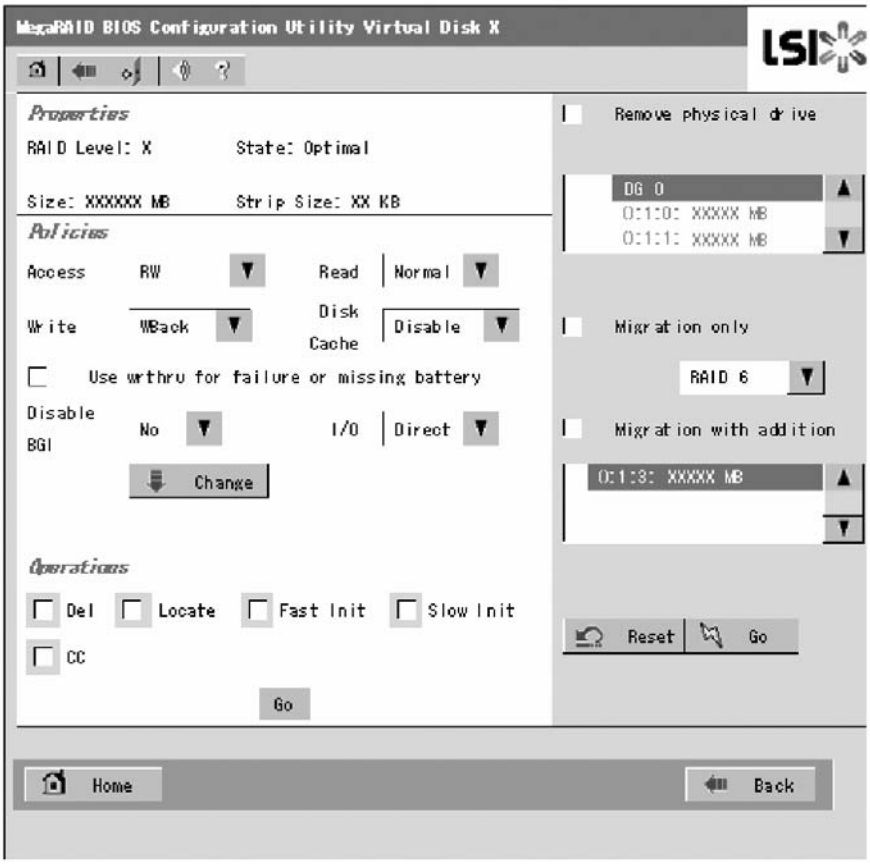

Figure 92: VD Settings Menu

The items required for the reconstruction are displayed.

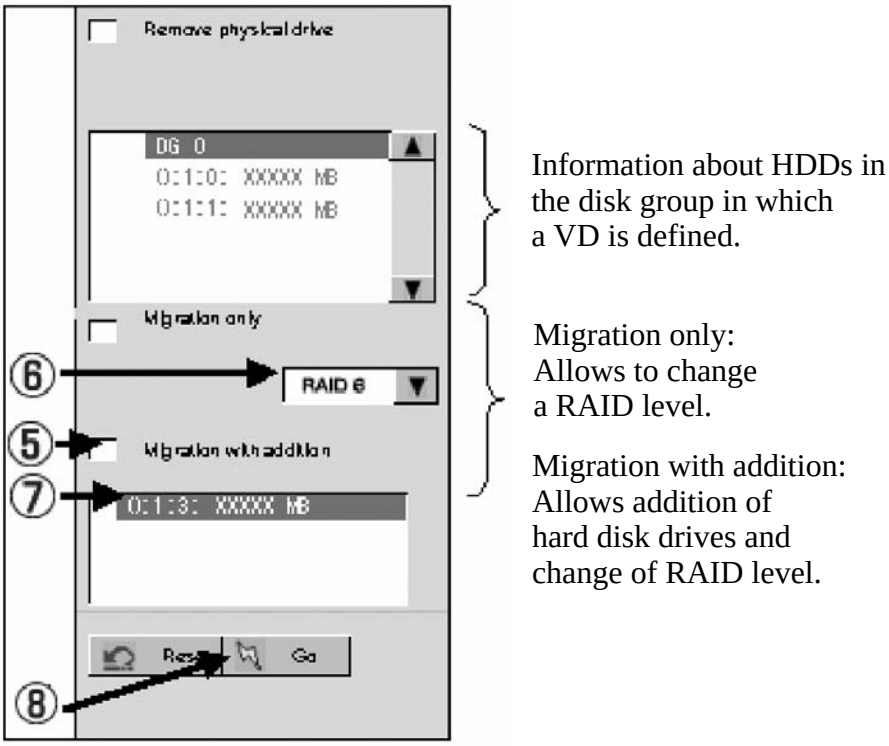

Figure 93: Reconstruction Settings Screen

4. Select "Migration with addition".
5. Specify the RAID level to be used after the reconstruction.
6. Select a HDD to be added.
7. When you have finished steps 5 to 7, click [Go] at the lower right of the screen.
8. The progress of the reconstruction is displayed on the lower left of the screen. Click [Home] to return to the WebBIOS Top Menu.

Caution

- The capacity of virtual disk may be incorrectly displayed after reconstruction. In this case, perform a Scan Devices from the Top Menu.
- Click [Home] while a background task such as Consistency Check, Rebuild, or Reconstruction is being executed. When the progress indication is displayed, the background task may process at a slow rate.

WebBIOS and Universal RAID Utility

You can use the Universal RAID Utility for the configuration, management, and monitoring of RAID System under the operating system.

The points to keep in mind when using the Universal RAID Utility together with WebBIOS are as follows.

Terms

LSI Software RAID Configuration Utility and Universal RAID Utility use different terms. Please refer to the following list.

Table 30: RAID Terminology Table

WebBIOS	Universal RAID Utility
Adapter	RAID Controller
Virtual Disk	Logical Drive
Disk Group	RAID system
Physical Drive	Physical Device

Number and ID

The numbers assigned to each component are different in both utilities.

Adapter and RAID Controller

WebBIOS identifies the Adapter starting from 0. You can see the Adapter number using [Adapter No] in the [Adapter Selection] menu.

The Universal RAID Utility identifies the RAID Controller starting from 1. You can see the RAID Controller number using [Number] in the RAID Controller properties on the RAID Viewer or using [RAID Controller #X] in the RAID Controller properties on the raidcmd command.

Also, you can see the number of the Adapter managed by WebBIOS using [ID] in the RAID Controller properties by the Universal RAID Utility.

Virtual Disk and Logical Drive

WebBIOS identifies the Virtual Disk starting from 0. You can see a number of Virtual Disk using [VD X] in Virtual Drives.

The Universal RAID Utility identifies the Logical Drive starting from 1. You can see the Logical Drive number using [Number] in the Logical Drive properties on the RAID Viewer or using [RAID Controller #X Logical Drive #Y] in the Logical Drive properties on the raidcmd command.

You can also see the Logical Drive number managed by WebBIOS where [ID] in the property of Logical Drive by Universal RAID Utility.

RAID system

WebBIOS identifies the RAID system starting from 0. You can see the RAID system number using [DG X] in Physical Drives and Virtual Drives.

The Universal RAID Utility identifies the RAID system starting from 1. You can see the RAID system number using [RAID system] in the Logical Drive properties on the RAID Viewer or using [RAID Controller #X RAID system #Y] in the RAID system properties on the raidcmd command.

Physical Drive and Physical Device

WebBIOS identifies the Physical Drive using three numbers (Connector number:Enclosure number:Slot number). You can view these numbers shown as [x:x:x] in the Physical Drives box. Note, however, that the Connector number is always shown as "()" because it is not supported with this server. The Enclosure numbers are represented starting from 1, and the Slot numbers are represented starting from 0.

Universal RAID Utility identifies Physical Device using a number starting from 1 and the ID, Enclosure number, and Slot number. The numbers of the physical devices connected to the controller are sorted in ascending order based on the ID and assigned

with a number (minimum is 1), starting from the smallest number. The ID is same value than the Connected Port shown in Physical Drives Properties box in WebBIOS. The Enclosure number and Slot number start from 1.

Caution

Note that the slot numbers shown in Physical Drives box of WebBIOS are represented starting from 1, but those in Universal RAID Utility are represented starting from 0.

Priority Settings

WebBIOS displays and sets the Rebuild Priority and the Consistency Check Priority of the RAID Controller using a percentage whereas the Universal RAID Utility uses three levels (High/Middle/Low).

Table 31: Priority and Value Settings

Item	WebBIOS Setting Value	Universal RAID Utility Level
Rebuild Priority Rebuild Rate (WebBIOS)	80 to 100	High
	31 to 79	Middle
	0 to 30	Low
Patrol Read Priority Patrol Read Rate (WebBIOS)	80 to 100	High
	31 to 79	Middle
	0 to 30	Low
Consistency Check Priority Consistency Check Rate (WebBIOS)	80 to 100	High
	31 to 79	Middle
	0 to 30	Low

Table 32: Settings Levels and Values

Item	Setting level of Universal RAID Utility	Setting value
Rebuild Priority Rebuild Rate (WebBIOS)	High	90
	Middle	50

Table 32: Settings Levels and Values

Item	Setting level of Universal RAID Utility	Setting value
	Low	10
Patrol Read Priority Patrol Read Rate (WebBIOS)	High	90
	Middle	50
	Low	10
Consistency Check Priority Consistency Check Rate (WebBIOS)	High	90
	Middle	50
	Low	10

***Notes**:*

- *WebBIOS can set BGI Rate (Background Initialize Priority) whereas the Universal RAID Utility cannot.*
- *The Universal RAID Utility can set an Initialization Priority, but it can't set it to the LSI Embedded MegaRAID. Therefore, the Universal RAID Utility doesn't display the [Initialization Priority] in the RAID Controller properties. Changing the Initialization Priority by raidcmd command will also fail.*

Configuring Motherboard Jumpers

With the pre-installed SETUP utility, you can set passwords to protect the data stored in the server against access from unauthorized users.

If you forget the passwords, your only option is to clear them. The following describes how to clear these passwords. You can also use the following procedure to clear the CMOS data in the server.

⚠ Caution

- Clearing the CMOS data resumes the factory-set configuration data.
- After clearing CMOS, you must run the BIOS SETUP utility and execute the following menus to reconfigure your motherboard:
  - Load Setup Defaults in the Exit menu
  - Memory Retest of Memory Configuration in the Advanced menu
  - Processor Retest of Processor Settings in the Main menu
- Refer to "RAID Configuration" on page 83 for the RAID Configuration jumper settings.
- Do not change any other switch settings. Any change may cause the server to fail or malfunction.

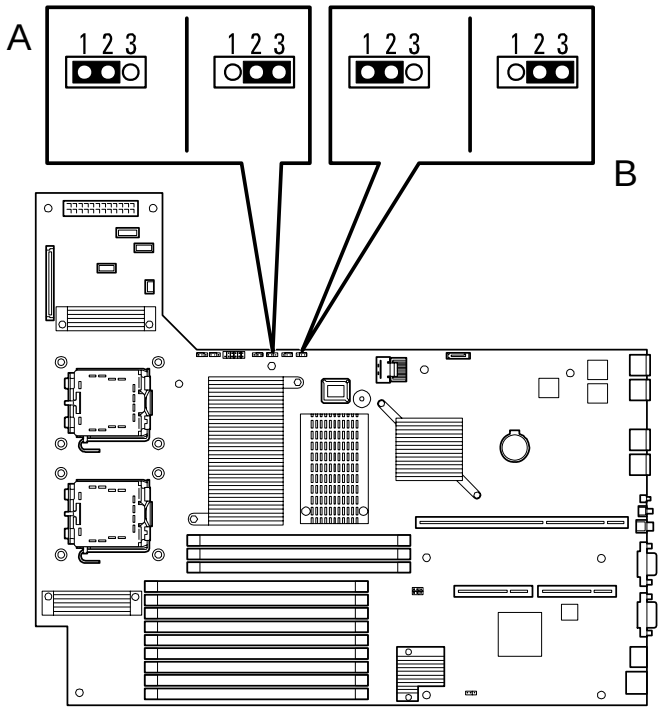

Figure 94: Clear CMOS & Clear Password Jumpers

A	**Clear password jumper** **1-2 Normal** **2-3 Clear password**	**B**	**Clear CMOS jumper** **1-2 = Normal** **2-3 = Clear CMOS**

The following describes the clearing procedure.

Warning

Observe the following instructions to use the server safely. Failure to follow these instructions may result in death or serious personal injury. See "General Safety Information" on page 156 for details.

- Do not disassemble, repair, or alter the server.
- Do not remove the lithium battery.
- Do not connect the ground line to a gas pipe.

Caution

Observe the following instructions to use the server safely. Failure to follow these instructions may result in death or serious personal injury. See "General Safety Information" on page 156 for details.

- Never attempt to lift the server only by yourself.

- Make sure to complete board installation.
- Do not install the server on a rack with leaving covers removed.
- Do not pinch your finger with mechanical components.
- Note high temperature.
- Do not pull out a device from the rack if the rack is unstable.
- Do not leave more than one device being pulled out from the rack.

Clearing CMOS or Password

To clear the CMOS or the password, do as follows:

1. Power off the server and disconnect the power cord and all the cables connected on the rear of the server.
2. Remove the logic cover.
3. Locate the position of the jumpers on the motherboard (see *Figure 94: on page 153*).
4. For clearing the BIOS password, remove the jumper strap on the BIOS password clear jumper. For Clearing the CMOS, move the jumper strap to the CMOS clear position (2-3).
5. Connect the power cord and power on the server.
6. Wait until the “Password cleared” or “CMOS cleared” message is displayed (about 5 seconds).
7. Power off the server and disconnect the power cord.
8. Re-install the jumper block to the default position.
9. Reinstall the cover removed in Step 2.
10. Plug the power cord and all the cables to the server and turn on the server.
11. Press **F2** when prompted to run the BIOS Setup utility, and select "Load Setup Defaults" at the Exit menu.

⚠ Caution

- Clearing the CMOS data resumes the factory-set configuration data.
- After clearing CMOS, you must run the BIOS SETUP utility and execute the following menus to reconfigure your motherboard.
  – Load Setup Defaults in the Exit menu
  – Memory Retest of Memory Configuration in the Advanced menu
  – Processor Retest of Processor Settings in the Main menu

Upgrading Your System Information

General Safety Information

Warning

The DC push-button on/off switch on the front panel does not turn off completely the server AC power. Also, +5vdc is present on the system board whenever the AC power cord is connected between the server and an AC outlet. Before doing the procedures in this manual, make sure that your system is powered off and unplug the AC power cord from the back of the chassis.

Failure to disconnect power before opening your server can result in personal injury and equipment damage.

Caution

Operating your system with the upper access panel removed can damage your server components.

For proper cooling and airflow, always replace the upper access panel before powering on your server.

Warning

Avoid burns: If the server has been running, any installed processor and heat sink on the processor board(s) will be hot.

To avoid a burn, be careful when removing or installing components that are located near processors.

Contact your sales representative or dealer for a list of approved optional peripheral devices.

Static Precautions

An electrostatic discharge (ESD) can damage disk drives, option boards, and other components. You can provide some ESD protection by wearing an antistatic wrist strap attached to chassis ground when handling system components.

Electronic devices can be easily damaged by static electricity. To prevent damage, keep them in their protective packaging when they are not installed in your server.

Equipment Log

Use the equipment log form (product configuration record table) located at the end of this manual to record the model and serial number of your server, installed options, and any other pertinent information specific to your server. You will need this information when configuring your server.
See "Appendix 8: Equipment Log" on page 358.

Tools Recommended for Upgrading Your Server

Depending on the upgrade, you will need one or more of the following tools:

- Phillips screwdriver (#1 bit and #2 bit)
- Flat-head screwdriver
- Small needle nose pliers
- Pen or pencil
- ESD workstation or antistatic wrist strap (recommended)

Preparing Your Server for Upgrade

To prepare your server for installation or removal

1. Observe the safety and static precautions listed under “General Information” and “Static Precautions” at the beginning of this chapter.
2. Shutdown the operating system (OS).

   It is not necessary to shutdown to replace hot-swappable components, such as the hard disk drives and the additional power supply units, if applicable.
3. Unlock and remove the front bezel. (*See “Removing the Front Bezel” on page 56.*)

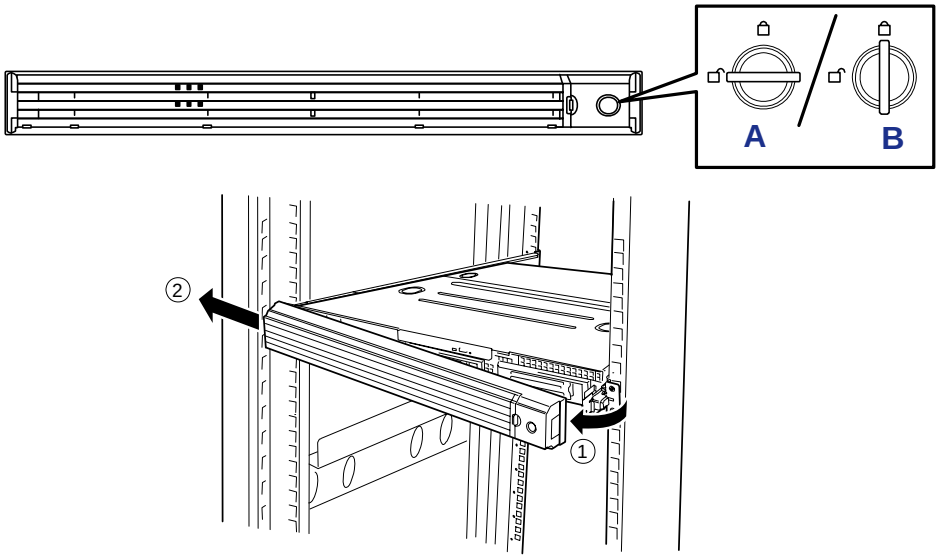

A - Unlocked B - Locked

Figure 95: Unlocking and removing the Front Bezel

4. Power off the server then press the POWER switch on the front panel of the server.
   The POWER lamp goes out.
5. Unplug the server power cord(s) from the AC wall outlet(s).

> ***Note**: If the server power cord is connected to a power control unit such as an UPS (Uninterruptible Power Supply), refer to the UPS user's guide for proper power-off procedures.*

6. Unplug the I/O cables connected to the rear panel of your server.

The server needs to be pulled out from the rack for installing/removing any internal components other than the hard disk drives and power supply units (redundant power supply model only).

7. <This step is required only when the optional cable arm is mounted.>
   Remove the cable arm from the server.
8. Push the left and the right unlock buttons on the front of the server, and pull out the server from the rack slowly and carefully. The server clicks to unlatch.

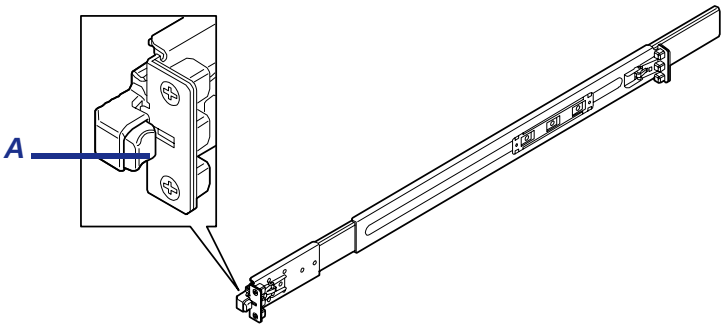

Figure 96: Pushing the Unlock Button

A: Unlock button

9. Push the right and left release levers (blue) forward or rearward to unlock, and slowly pull out the server from the rack.

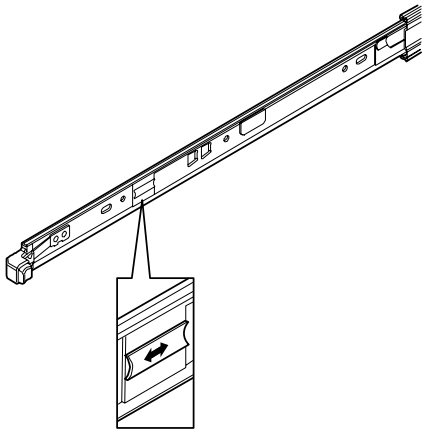

Figure 97: Pushing the Release Levers

⚠ Caution

Do not apply any load on the server when it is pulled out from the rack. Personal injuries may occur if the server falls.

10. Firmly hold the server, and take it out from the rack.

⚠ Caution

- Pull out the server slowly holding the bottom of the server by at least two persons.
- Do not catch your fingers in the levers or rails.

Installing and Removing a Hard Disk Drive

The hard disk drive bay at the front of the server chassis may contain hard disk drives of approximately 25.4 mm (1 inch) high.

The disk interface, number and size of hard disk drives depend on server model, as described below. The IDs of hard disk drive (channel numbers or port numbers) are also predefined.

3.5-inch Disk Model

SATA hard disk drive

The serial ATA (SATA) interface is suppported by the following RAID controllers:

- Onboard RAID Controller (LSI Embedded MegaRAID)
- LSILogic MegaRAID SAS 8480E Controller
- Disk Array Controller (SAS/SATA HW RAID0/1)
- Disk Array Controller (SAS/SATA HW RAID5/6)

Up to three hard disk drives (mounted on the dedicated 3.5-inch width tray) can be installed.

⚠ Caution

Do not use any hard disks that are not approved by your sales representative. Installing a third-party hard disk may cause a failure of the server as well as the hard disk. Purchase hard disks of the following models:

- 80 GB, 7,200 rpm, serial ATA2/300
- 160 GB, 7,200 rpm, serial ATA2/300
- 250 GB, 7,200 rpm, serial ATA2/300
- 500 GB, 7,200 rpm, SATA2/300
- 750 GB, 7,200 rpm, SATA2/300

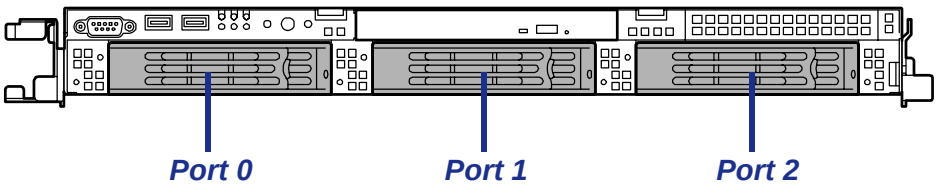

Figure 98: SATA hard disk drive bays

SAS hard disk drive

Can be used only when one of the optional RAID Controller listed below is installed:

- LSILogic MegaRAID SAS 8480E Controller
- Disk Array Controller (SAS/SATA HW RAID0/1)
- Disk Array Controller (SAS/SATA HW RAID5/6)

Up to three hard disk drives (mounted on the dedicated 3.5-inch width tray) can be installed.

⚠ Caution

Do not use any hard disks that are not approved by your sales representative. Installing a third-party hard disk may cause a failure of the server as well as the hard disk. Purchase hard disks of the following models:

- 36.3 GB, 15000 rpm, SAS
- 73.2 GB, 15000 rpm, SAS
- 146.5 GB, 15000 rpm, SAS
- 300 GB, 15000 rpm, SAS

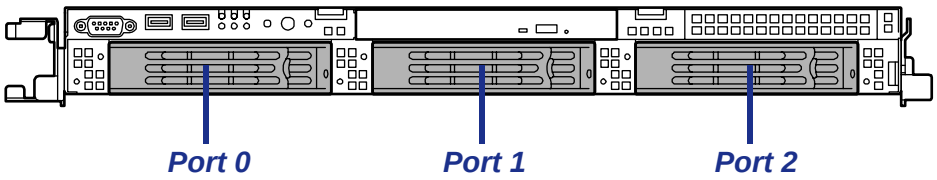

Figure 99: SAS hard disk drive bays

The hard disk drive bays are connected to the Mini SAS connector on the motherboard. To use the hard disk drives in a RAID System, refer to:

- When using the Onboard RAID Controller (LSI Embedded MegaRAID):

  Use LSI Software RAID Configuration Utility or Universal RAID Utility to build, configure, and manage the RAID System.

- When using an optional RAID Controller:

  Use WebBIOS or Universal RAID Utility to build, configure, and manage the RAID System.

2.5-inch Disk Model

The Internal RAID Controller supports the SAS interface. Up to six hard disk drives (mounted on the dedicated 2.5-inch width tray) can be installed.

⚠ Caution

Do not use any hard disks that are not approved by your sales representative. Installing a third-party hard disk may cause a failure of the server as well as the hard disk. Purchase hard disks of the following models:

- 36.3 GB, 10000 rpm, SAS
- 73.2 GB, 10000 rpm, SAS
- 146.5 GB, 10000 rpm, SAS
- 36.3 GB, 15000 rpm, SAS
- 73.2 GB, 15000 rpm, SAS

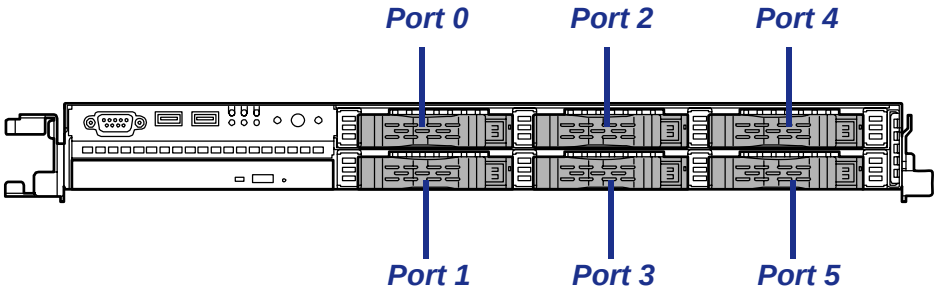

The hard disk drive bays are connected to the Internal RAID Controller.

Use WebBIOS or Universal RAID Utility to build, configure, and manage the RAID System.

Installing a Hard Disk Drive

***Note**: Hard disks can be installed or removed in or from the server only by opening the front bezel.*

⚠ Caution

- In a RAID system configuration, only use hard disk having the same specifications, including capacity.
- Do not press the Power switch during the installation or remobval of the hard disk drive if your server is running.

1. Read section *"Preparing Your Server for Upgrade" on page 159*.
2. Unlock of the front bezel with the security key and remove the front bezel.
3. Locate the slot in which you are going to install the hard disk drive. Start with the left-most first vacant slot.
4. Prepare the drive carrier.
   - Unlock the hard disk drive handle.

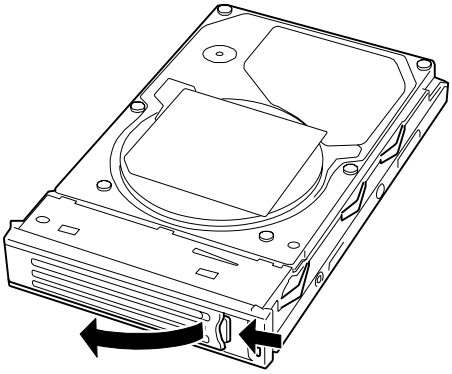

Figure 100: Unlocking the hard disk drive handle (3.5-inch drive)

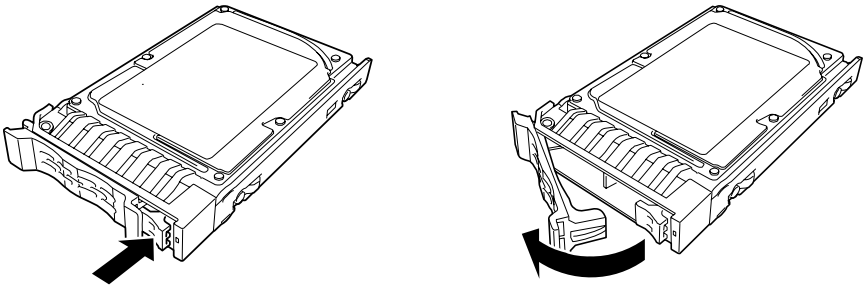

Figure 101: Unlocking the hard disk drive handle (2.5-inch drive)

   - Pull out the drive carrier from the chassis.

5. Secure a hard disk drive into the carrier with four screws (one at the front and one at the back on both sides).
6. With the handle fully open, hold the drive carrier and handle, and isert it into the chassis.

⚠ Caution

- Do not push on the handle before it begins to close by itself.
- Carefully hold the hard disk drive with both hands.
- Do not press the POWER switch during the installation or removal of the hard disk drive if your server is running.

***Note**: Confirm that the handle is hooked to the frame when having inserted the hard disk drive.*

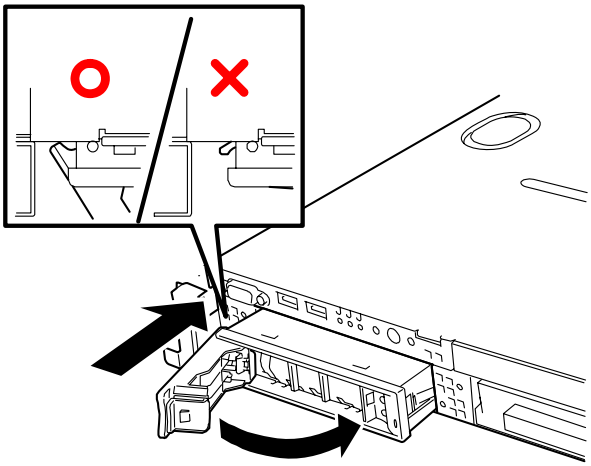

Figure 102: 3.5-inch drive

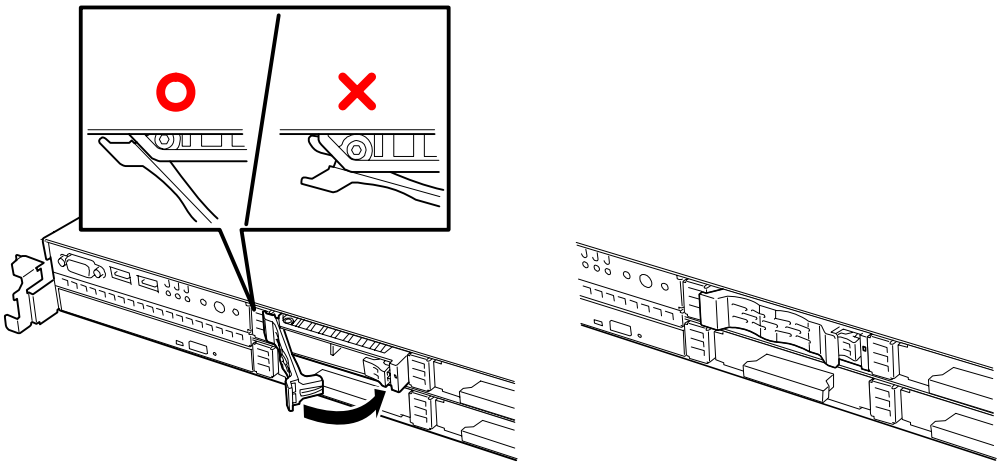

Figure 103: 2.5-inch drive

7. When the handle begins to close by itself , slowly close the handle.
   The drive carrier clicks into place when it is securely locked.

⚠ Caution

- Be careful not to get your finger caught between the handle and tray.
- Push the drive further to check if it is firmly secured.

8. Power on the server, and run SETUP utility.
   Select the [Boot] menu to set the boot priority. When you install an additional hard disk drive, the boot priority stored in the BIOS is cleared.

9. Replace the front bezel you removed in step 2.
   There are tabs on the left side of the front bezel. Engage the tabs with the server frame, install the front bezel, and lock it with the security key.

Removing a Hard Disk Drive

***Note**: To remove a failing hard disk drive, confirm the slot which hard disk drive DISK lamp is lit amber*

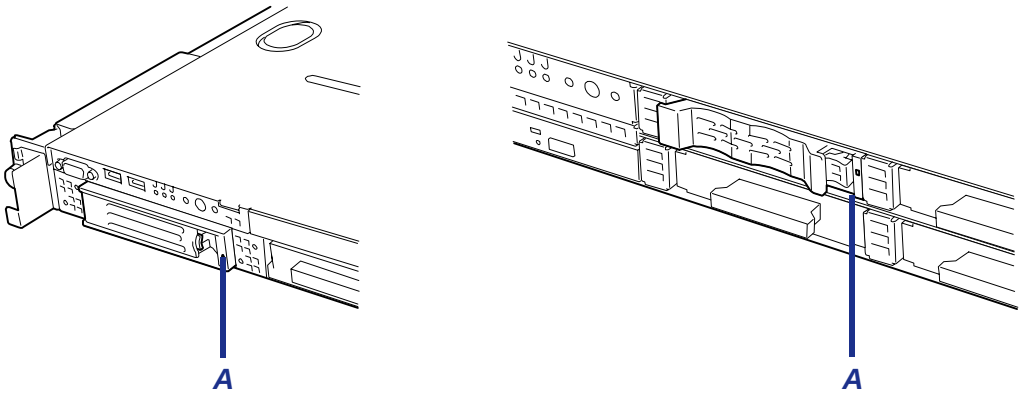

Figure 104: Hard Disk Drive DISK lamp (left: 3.5-inch model, right: 2.5-inch model)

A - DISK Lamp

1. Read section *"Preparing Your Server for Upgrade" on page 159*.

2. Unlock the front bezel with the security key and remove the front bezel.
3. Push the lever to unlock and open the handle.

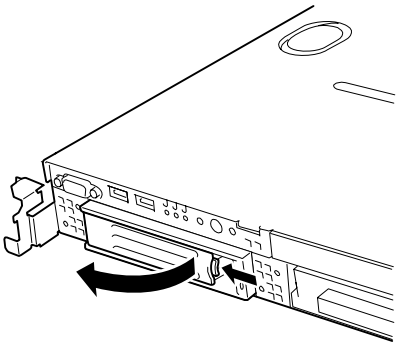

Figure 105: Unlocking the Hard Disk Drive (3.5-in drive)

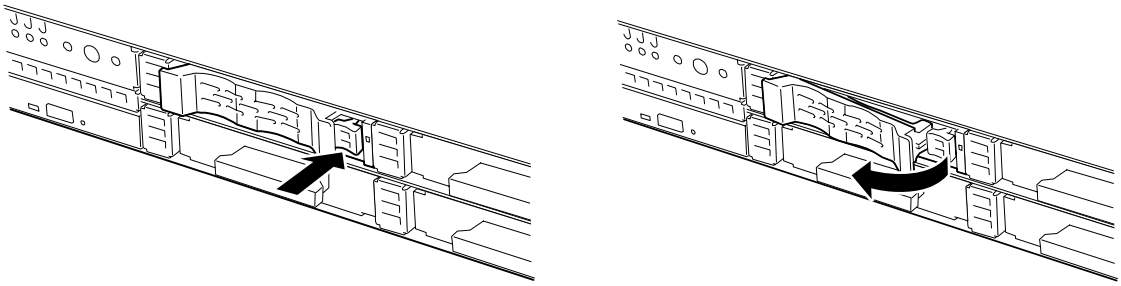

Figure 106: Unlocking the hard disk drive (2.5-inch model)

⚠ Caution

Do not press the POWER switch during the installation or removal of the hard disk drive if your server is running.

4. Firmly hold the handle and hard disk drive and pull out the hard disk drive.

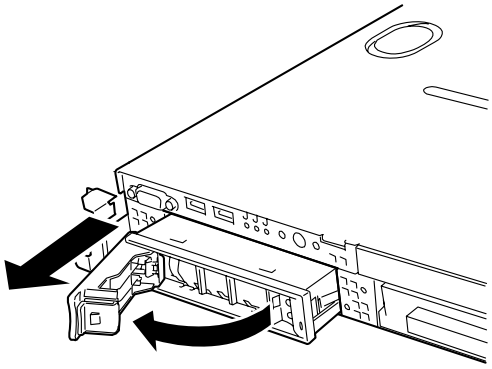

Figure 107: Pulling out the hard disk drive (3.5-inch model)

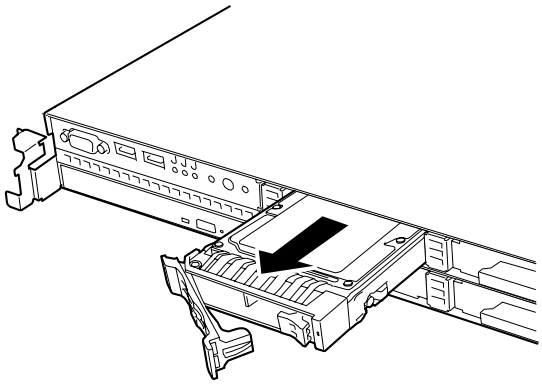

Figure 108: Pulling out the hard disk drive (2.5-inch model)

5. When using the server without replacing the hard disk drive, remove the hard disk drive from the disk tray (remove the four screws) and replace the empty tray into the slot.
6. Replace the front bezel.

Notes on replacing Hard Disk Drives in a RAID Configuration

When the hard disks are in the RAID system configuration, you can restore the state before an error using the auto-rebuild feature that stores the data in the old hard disk into a new one.

The auto-rebuild feature is available for the RAID1, RAID5, or RAID10 RAID system configuration.

Auto-rebuild is carried out when you hot-swap a failed hard disk with a new one (replace the disk while the server is powered). While auto-rebuild is in progress, the DISK lamp flashes green and amber alternatively to indicate it.

⚠ Caution

- When auto-rebuild fails, the DISK lamp lights in amber. Remove and install the hard disk again to restart auto-rebuild.
- If the RAID system management utility is installed, it may display or act as follows:
  - Displays "Rebuild was cancelled" on the screen while auto-rebuild is in progress.
  - Appears to stop and restart auto-rebuild.
- If the DISK lamp does not light in amber after auto-rebuild, however, auto-rebuild has completed successfully.

Observe the following notes for auto-rebuild.

- Do not power off the server between the detection of a hard disk drive error and the completion of the auto-rebuild.
- Wait at least 30 seconds between the removal and the installation of a hard disk drive.
- Do not replace another hard disk drive while a rebuilding is in progress. (The DISK LED flashes alternatively green and amber when rebuilding a hard disk drive.)

Installing and Replacing a Power Supply Unit (Redundant Power Supply Models)

Your SAS hot-swap HDD configuration contains one or two power supplies.

The second power supply is optional and provides a redundant configuration that ensures continuous operation of the system in the unlikely event one of the power supplies fails

Installing a Power Supply Unit

1. Read section *"Preparing Your Server for Upgrade" on page 159*.

Caution

Turn off the power. Failure to do so causes the server to malfunction or fail.

2. Pull the cable arm toward the rear of the server and confirm the slot for installing an optional power supply unit.
3. Hold and pull the lever of the blank cover and remove the blank cover.

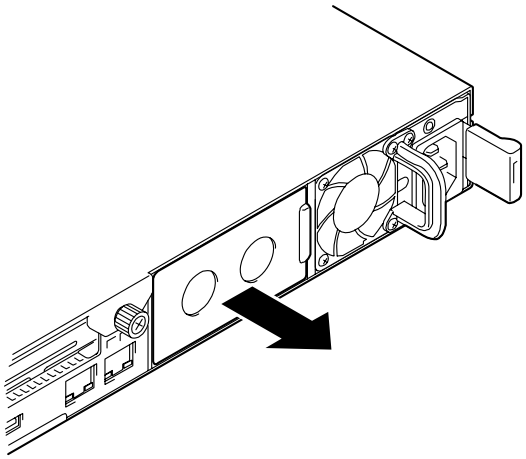

Figure 109: Removing the Blank Cover

4. Keep the removed blank cover for future use.
5. Insert the power supply unit in the server.

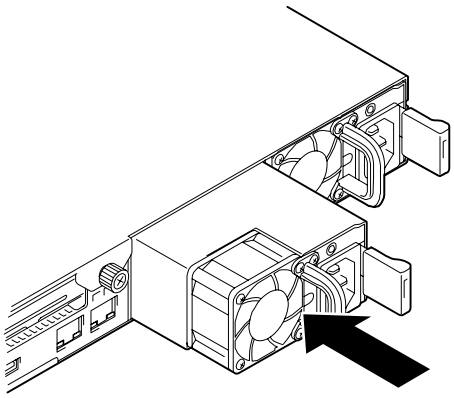

Figure 110: Inserting the Power Unit in the Server

⚠ Caution

Do not touch the terminals A of the power supply unit.

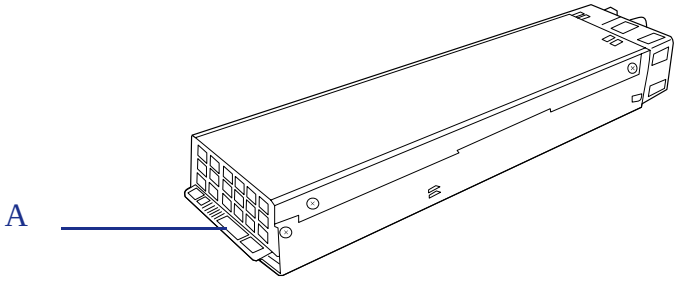

A - Contact terminals

6. Grasp the handle and firmly push the power supply until you hear a “click”. The power supply unit is locked.

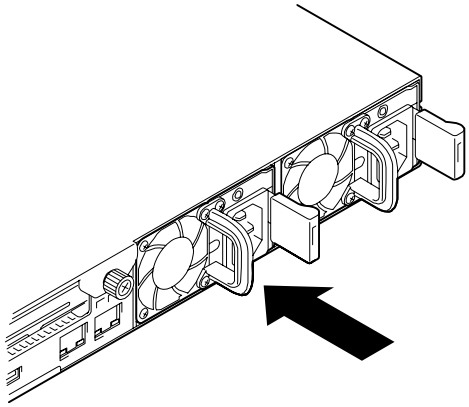

Figure 111: Locking the Power Unit Supply

7. Connect two power cords. Use the power cord provided with the standard power supply unit and the one provided with the server.
   The AC POWER lamps flash when the power cords are connected.

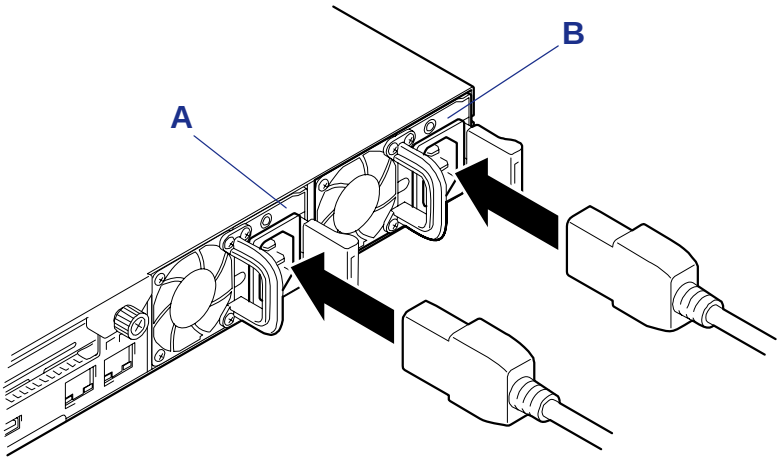

Figure 112: Connecting the Power Cords

A - Power supply unit 1 (Option)
B - Power supply unit 2 (Standard)

8. Power on the server.
   The AC POWER lamps go on.

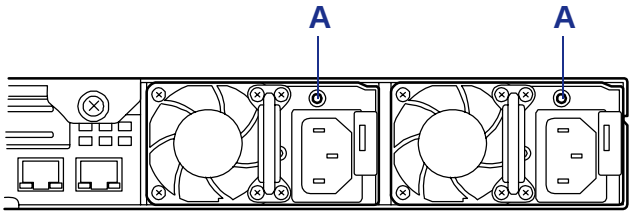

Figure 113: AC Power lamps

A: AC Power LED

9. Confirm, by the STATUS lamp or on the POST screen, that there are no errors related to the power supply units.
10. If the AC POWER lamps are off, reinstall the power supply units. If the same error message still appears, contact your sales representative.

Replacing a Failing Power Supply Unit

Replace only a failing power supply unit.

Caution

Do not remove a power supply unit operating normally.

***Note**: If one power supply unit fails while the server contains two power supply units in a redundant configuration, the failing power supply unit can be replaced with the system operating (power-on state).*

1. Locate the failing power supply unit by the AC POWER lamp on the rear of each power supply unit. (The lamp of the failing power supply unit is amber.)
2. Shutdown the server.
3. To turn off the power, press the POWER switch.
4. Disconnect the power cord from the failing power supply unit.
5. Hold the handle of the failing power supply unit.
6. While pressing the lever (1), pull the power supply unit (2) to remove if from the chassis.

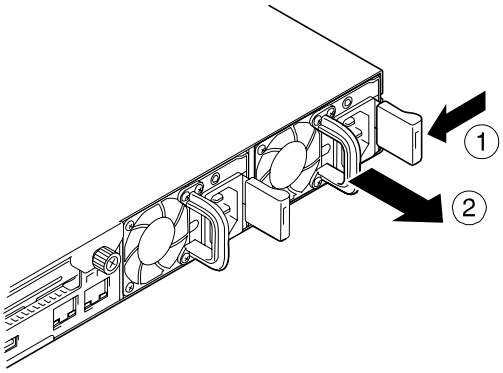

Figure 114: Removing the Power Supply form the Chassis

7. If operating the server with a single power supply unit without installing a new one, install the blank cover you removed in *"Hold and pull the lever of the blank cover and remove the blank cover." on page 170* of power supply unit installation procedure.

⚠ Caution

To maintain the cooling effect in the server, install the blank cover in the vacant slot.

8. Install the new power supply unit. *See "Installing a Power Supply Unit" on page 170.*
9. Check that the power supply unit is installed correctly.

***Note**: If one of the two power supply units of the server is replaced while the power is on, the POWER lamp of the new power supply unit goes on.*
(If it is replaced while the power is off, the lamp flashes. The lamp goes on when you power on the server.)

Removing and Replacing the Top Cover

The top cover is made of two separate parts:

- the front part (drive cover) that has be removed to install or remove a 5.25-inch optical device,
- the rear part (logic cover) that has to be removed to install or remove DIMMs or PCI boards.

This section explains how to:

- Remove and install thedrive cover
- Remove and install the Logic cover.

Removing and Installing the Drive Cover

Open the drive cover when installing/removing a fan assembly, a processor, and backup file device, or reconnecting an internal cable.

Removing the Drive Cover

1. Read section *"Preparing Your Server for Upgrade" on page 159*.
2. Pull out the server from the rack.
3. Slide the drive cover toward the rear of the server while pressing the lock button on the cover.
4. Lift off the drive cover from the server.

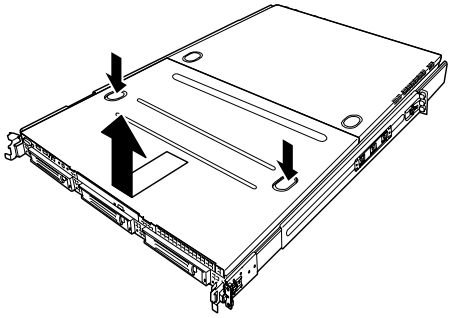

Figure 115: Removing the Drive Cover from the Chassis

Installing the Drive Cover

1. Install the drive cover, check that the tab of the cover is securely inserted into the slot in the server frame.

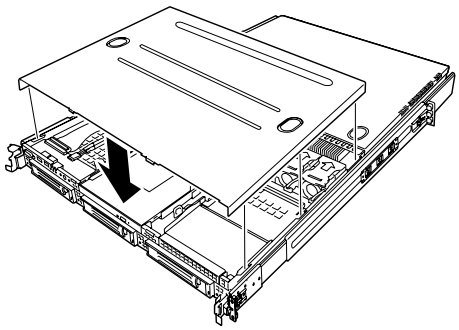

Figure 116: Installing the drive cover

2. Slide the drive cover toward the rear of the server until you hear a “click”. The drive cover is locked.
3. Check the release button for normal state.

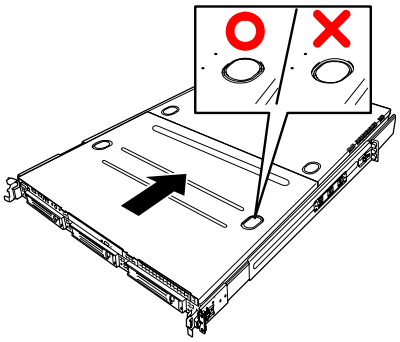

Figure 117: Chassis release button

Removing and Installing the Logic Cover

Open the logic cover when installing/removing a DIMM, processor, and PCI add-in card or reconnecting an internal cable.

Removing the Logic Cover

1. Read section *"Preparing Your Server for Upgrade" on page 159*.
2. Pull out the server from the rack.
3. Remove the captive thumbscrew at the rear of the server.
4. Slide the logic cover toward the rear of the server and lift off the cover from the server.

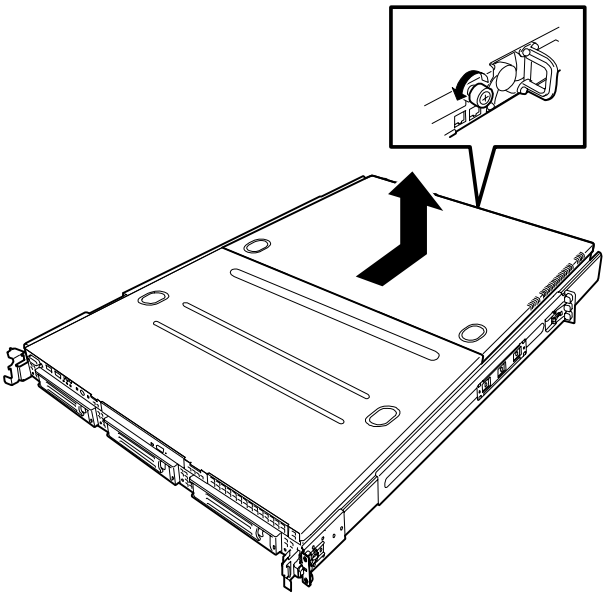

Figure 118: Removing the Logic Cover

Installing the Logic Cover

1. Slide the logic cover toward the rear of the server and secure the cover with the captive thumbscrew.

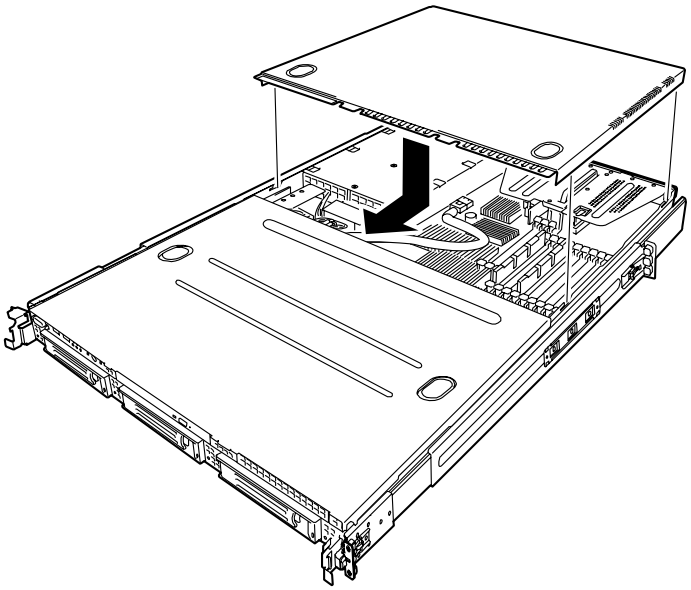

Figure 119: Installing the Logic Cover

2. Check that the tab of the cover is securely inserted into the slot in the server frame.

***Note**: If the logic cover cannot be closed firmly, remove the drive cover before installing the logic cover.*

Installing or Removing Random Access Memory

The DIMM (Dual Inline Memory Module) is installed in a DIMM socket on the motherboard in the server. The motherboard contains douze DIMM board slots.

***Note**: Up to 48 GB of memory (4 GB DIMM x 12) can be installed. (The DIMMs installed as standard need to be replaced in this case.)*

Caution

- The DIMM is easily affected by static electricity. Handle the DIMM after making your body contact with a metallic frame section of the server to discharge the static electricity on your body. Do not make bare hands contact with terminals and components on the DIMM. In addition, do not put the DIMM on a desk directly. See “Static Precautions” on page 157. for details about the static electricity.
- Use a DIMM approved by Bull. If an unapproved third party's DIMM is installed in the server, the DIMM and the server may be defected. You will be charged by any repair of a malfunction or defect caused by such a device within the warranty period.

DIMMs Installation Order

DIMMs must be populated in pairs and in the following order: Group #1, #2, #3, #4, #5 and #6.

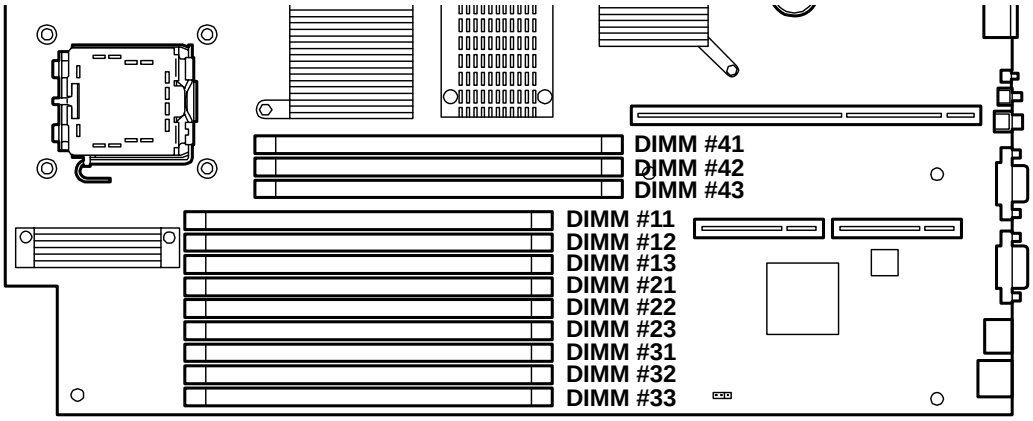

Order	Group	Sockets N°
1	1	#11 and #21
2	2	#31 and #41
3	3	#12 and #22
4	4	#32 and #42
5	5	#13 and #23
6	6	#33 and #43

Figure 120: Locating the DIMM Sockets

⚠ Caution

- Install matched pairs of DIMMs equal in speed and size.
- Refer to "Using the Memory RAS Features" on page 183 to configure the memory mirrorins and online sare memory features.

Installing DIMMs

⚠ Caution

The server supports DIMMs of only the low-profile type (30 mm (1.2 inches) in height). It does not support DIMMs exceeding the specified height.

To install a DIMM module:

1. Read section *"Preparing Your Server for Upgrade" on page 159*.
2. Pull out the server from the rack.
3. Open the logic cover. *See "Removing the Logic Cover" on page 178.*
4. Locate the socket in which a DIMM module is installed.
5. Open the levers at both ends of the socket.

⚠ Caution

To avoid damaging the lever, do not apply an excess force onto the lever.

6. Align the new module with an empty memory socket. Make sure the notch on the module aligns with the key in the socket. The module is designed to install into the socket in only one way.
7. Press the DIMM module firmly into the socket. If the DIMM is inserted into the DIMM socket, the lever is automatically closed.

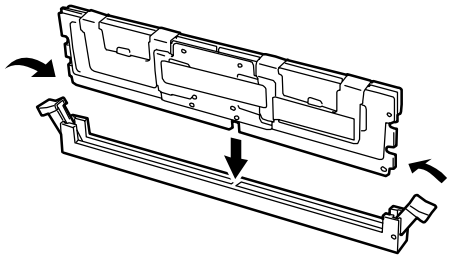

Figure 121: Inserting the module

***Note**: Make sure of the orientation of the DIMM. Position the DIMM so that a notch in the bottom edge of the DIMM aligns with the keyed socket. Applying too much pressure can damage the socket. Keyed DIMMs insert only one way.*

8. Make sure the locking clips at either end of the module click closed. If the brackets don't secure themselves to the module, carefully remove the module, then reinstall it.
9. Replace the logic cover.
10. Install the server on the rack.
11. Power on the server and verify that POST displays no error messages.
12. If POST displays an error message, take a note on the message and see *"POST Error Messages" on page 241*.
13. Start the SETUP and select [Advanced] > [Memory Configuration] to check that the installed DIMM shows the status "Normal". (See *"BIOS Setup Utility" on page 63* for more details.)

14. Select "Yes" for [Reset Configuration Data] on the [Advanced] menu.
    This setting is required to change the hardware configuration data. (See *"BIOS Setup Utility" on page 63* for more details.)
15. If the Windows operating system is in use, set the paging file size to the recommended value (total memory size × 1.5) or a greater value.

Removing DIMMs

***Notes**:*

- *To remove the failed DIMM, check the error message appearing in POST or NEC ESMPRO to identify the DIMM socket (group) in which the failed DIMM is installed.*
- *The server operates only when at least two DIMMs are installed.*

To remove a DIMM module:

1. Read section *"Preparing Your Server for Upgrade" on page 159*.
2. Pull out the server from the rack.
3. Open the logic cover. *See "Removing the Logic Cover" on page 178.*
4. Open the levers at both sides of the socket from which you remove the DIMM. The DIMM is unlocked and ready for removal.

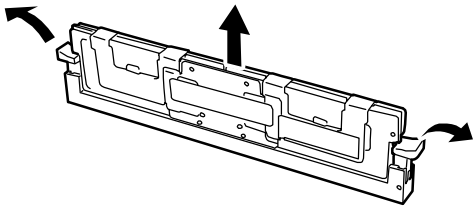

5. Replace the logic cover.
6. Install the server on the rack.

Using the Memory RAS Features

The server has the memory mirroring and online spare memory features as well as the x4/x8 SDDC ECC memory feature, which can automatically correct a memory error (multi-bit error) causing system shutdown.

Caution

The memory mirroring and online spare memory features are not available in the normal memory configuration. (The x4/x8 SDDC ECC memory feature can operate in any configuration.)

The memory area on the motherboard of the server is divided into two memory branches as shown in the figure below.

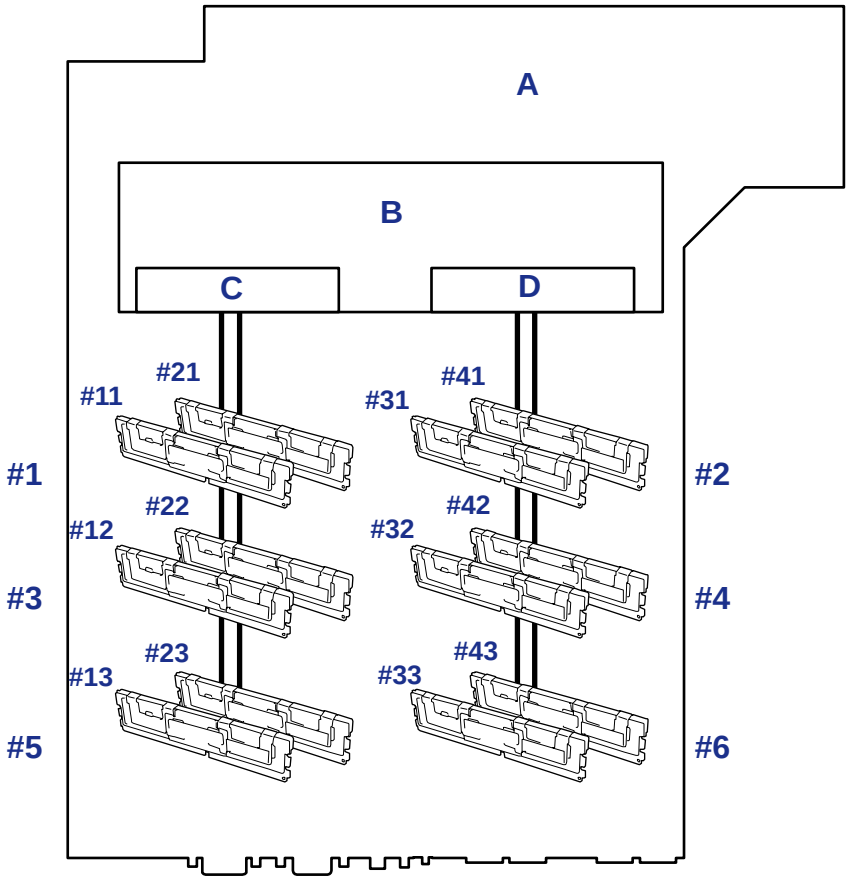

Figure 122: Memory Branches

A: Motherboard
B: Memory Controller
C: Memory Branch #1
D: Memory Branch #2

The memory mirroring and online spare memory features keep memory redundancy between memory branches and within a memory branch by monitoring or altering memory active/inactive status, respectively.

Memory Mirroring

The memory mirroring feature writes the same data into two groups of DIMMs corresponding with each other between memory branches (mirror set) to provide data redundancy.

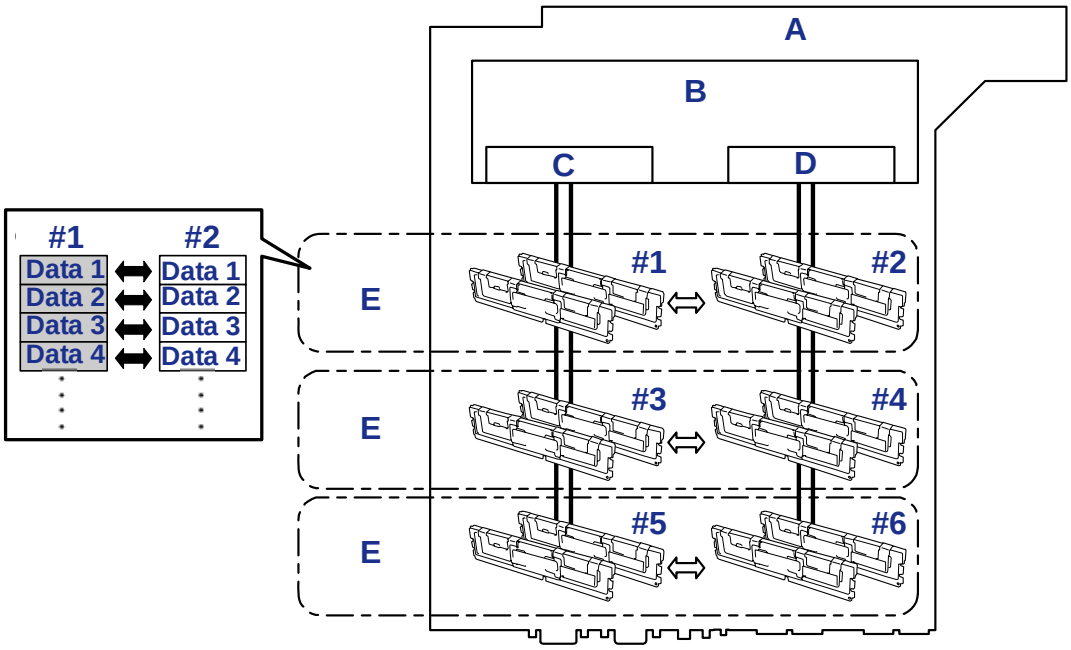

Figure 123: Memory Mirroring

A: Motherboard
B: Memory Controller
C: Branch #0
D: Branch #1
E: Mirroring Pairs

Note: *The operating system only recognizes half of the total physical capacity.*

The memory mirroring feature can be used under the following conditions:

- Install memory modules on four memory sockets configuring a mirror set.
- All the installed memory modules should have the same capacity.
- Run SETUP, change the parameters appropriately in the [Mirror] menu selected as shown below, save the settings and exit from SETUP.

  [Advanced], [Memory Configuration], [Memory RAS Feature], [Mirror]
- Install memory modules in the following order:

  Groups 1 and 2, Groups 3 and 4, Groups 5 and 6

The following mirroring cannot be configured:

- Memory mirroring between different mirror sets.

- Memory mirroring within a specific memory branch.

Notes on Configuring Memory Mirroring

In a memory mirroring configuration, the menus related to memory mirroring in the BIOS SETUP are grayed out and unselectable in the following cases:

- If you additionally install DIMMs that disable the memory mirroring
- If you remove DIMMs, thus disabling the memory mirroring

In this case, execute [Load Setup Defaults] to cancel the memory mirroring configuration.

<Procedure>

1. Note of the BIOS SETUP settings.
2. Press **F2** during POST to run the BIOS SETUP utility.
3. Select [Exit] → [Load Setup Defaults].
4. When the message "Load default configuration now?" appears, select [Yes].
5. Enter the parameter values you saved in step (1).

Note: *Executing [Load Setup Defaults] restores the default values for all Setup parameters. You need to specify those parameters again.*

The table below lists examples of DIMM installation patterns enabling the memory mirroring feature to be used.

Example	Memory Set (Group #)		Memory Set (Group #)		Memory Set (Group #)		Capacity	
	#1	#2	#3	#4	#5	#6	Physical	Logical
1	2GB	2GB	-	-	-	-	4GB	2GB
2	2GB	2GB	1GB	1GB	-	-	6GB	3GB
3	2GB	2GB	2GB	2GB	-	-	8GB	4GB
4	2GB	2GB	1GB	1GB	1GB	1GB	8GB	4GB
5	2GB	2GB	1GB	1GB	2GB	2GB	10GB	5GB
6	2GB	2GB	2GB	2GB	1GB	1GB	10GB	5GB
7	2GB	2GB	4GB	4GB	4GB	4GB	12GB	6GB
8	2GB	2GB	2GB	2GB	2GB	2GB	12GB	6GB
9	2GB	2GB	1GB	1GB	4GB	4GB	14GB	7GB
10	2GB	2GB	4GB	4GB	1GB	1GB	14GB	7GB
11	2GB	2GB	2GB	2GB	4GB	4GB	16GB	8GB
12	2GB	2GB	4GB	4GB	2GB	2GB	16GB	8GB
13	2GB	2GB	4GB	4GB	4GB	4GB	20GB	10GB
14	4GB	4GB	4GB	4GB	4GB	4GB	24GB	12GB
15	8GB	8GB	8GB	8GB	8GB	8GB	48GB	24GB

Online Spare Memory

The online memory spare feature puts a group of memory devices within a memory branch into standby status as spare devices. If an unrecoverable error occurs in a DIMM of the running group, the feature automatically changes the running DIMM from the failed one to a DIMM in the standby group to continue the processing.

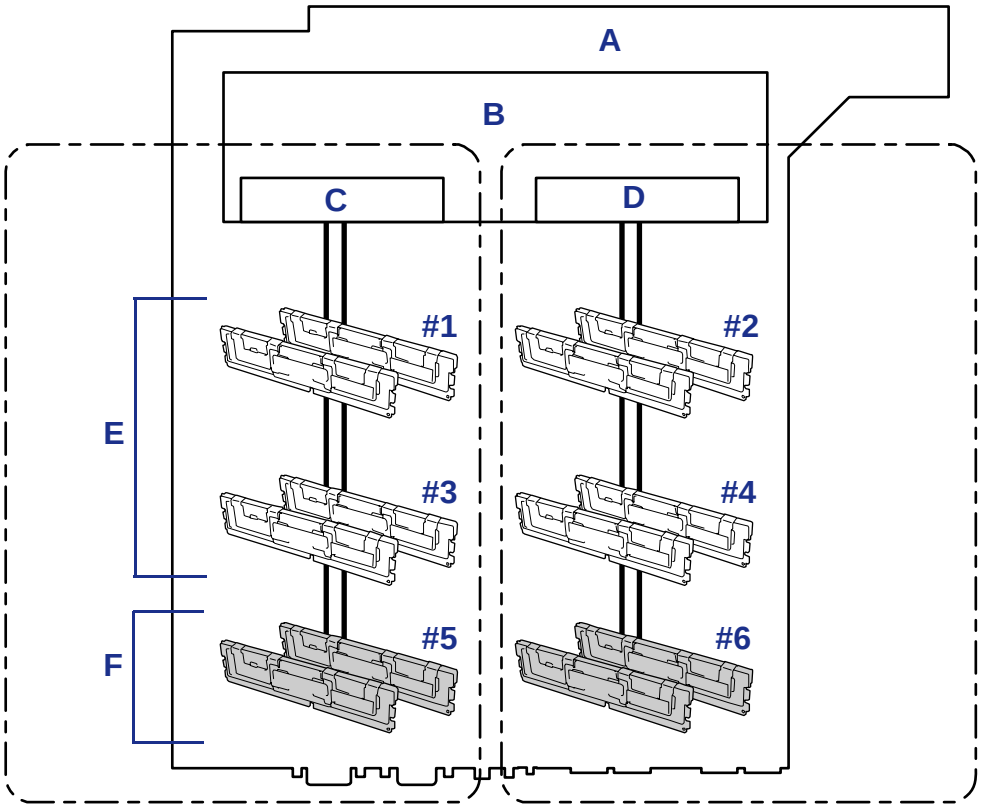

Figure 124: Online Spare Memory

A: Motherboard
B: Memory Controller
C: Branch #0
D: Branch #1
E: In Operation
F: Standbys

Note: *The operating system recognizes the memory devices as those with capacities less than the actual physical capacities. (The recognized capacities vary depending on the number of DIMMs and the physical capacity per DIMM.)*

The online spare memory feature can be used under the following conditions:

- Install memory devices to more than one group in each memory branch. The server can operate even if the memory branches are different in the number of DIMMs. For example, no error occurs if memory branches 0 and 1 include four DIMMs (or two groups) and six DIMMs (or three groups), respectively.

- DIMMs installed in a specific memory branch should have the same capacity. The server operates properly as long as DIMMs of the same capacity are installed in each memory branch. (For example, the server can operate if the total capacity of memory branch 0 is different from that of memory branch 1.)
- Run SETUP, change the parameters appropriately in the [Sparing] menu selected as shown below, save the settings and exit from SETUP.

  [Advanced], [Memory Configuration], [Sparing]
- Install memory devices in the following order:

  Group 1, Group 3, Group 5 for memory branch 0

  Group 2, Group 4, Group 6 for memory branch 1
- The spare memory group must be the group with the largest number within a memory branch.

The following sparing can be neither configured nor set.

- Sparing to another memory branch.

The table below lists examples of DIMM installation patterns enabling the online spare memory feature to be used. While the following patterns are provided for memory branch 0, the same patterns can also be adapted to memory branch 1.

Example	Memory Branch #0 (Group #)			Capacity	
	#1	#3	#5	Physical	Logical
1	1GB	1GB	-	2GB	1GB
2	1GB	1GB	1GB	3GB	2GB
3	2GB	2GB	-	4GB	3GB
4	2GB	2GB	2GB	6GB	5GB
5	4GB	4GB	-	8GB	6GB
6	4GB	4GB	4GB	12GB	10GB
7	8GB	8GB	-	16GB	12GB
8	8GB	8GB	8GB	24GB	20GB

Depending on the specification of the memory controller, the spare memory is set in units of rank memory.

The logical memory capacity of single rank memory differs from that of dual rank memory when online spare memory is specified.

- Single rank memory configuration

  Logical memory capacity = (Physical memory capacity * Number of DIMMs) – (Physical memory capacity)
- Dual rank memory configuration

  Logical memory capacity = (Physical memory capacity * Number of DIMMs) – (Physical memory capacity / 2)

Installing and Removing a Microprocessor

The server may have another CPU installed in addition to the standard CPU (Intel® Xeon™ Processor).

⚠ Caution

- The CPU is easily affected by static electricity. Touch the metal frame of the server to discharge static electricity from your body before handling the CPU. Do not make bare hands contact with the CPU pins. Do not place the CPU directly on the desk. See “Static Precautions” on page 157. for details about the static electricity.
- Do not operate the server until confirming that the additionally installed CPU is in normal state.
- Use a CPU approved by your sales representative. If an unapproved third party's CPU is installed in the server, the CPU and the server may be defected. You will be charged by any repair of a malfunction or defect caused by such a device within the warranty period.

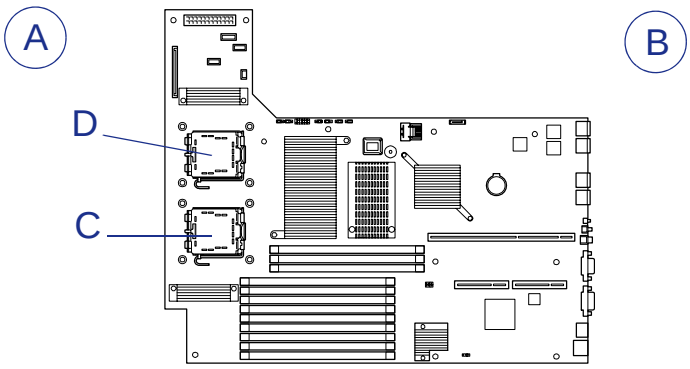

Figure 125: Processor Slots

A - Front B - Rear
C - Processor 1 D - Processor 2

***Note**: If the different revision of the processor is installed in the multiprocessor system, Windows logs the following information every startup. If this message is logged, it is no problem for operation.*

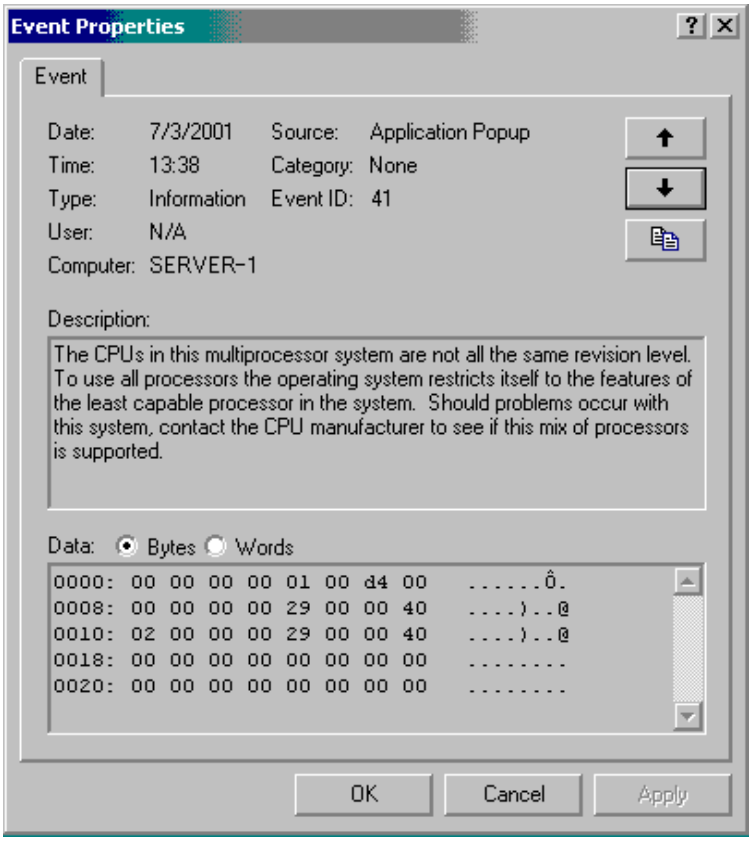

Installing a Microprocessor

1. Read section *"Preparing Your Server for Upgrade" on page 159*.
2. Pull out the server from the rack (See *"Removal" on page 49*).
3. Remove the drive cover (*"Removing the Drive Cover" on page 176*) and the logic cover (*"Removing the Logic Cover" on page 178*).
4. Remove the processor air duct from the chassis.

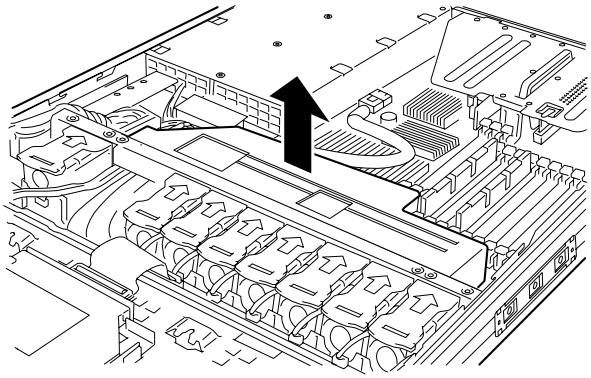

Figure 126: Removing the Processor Air Duct

5. Locate the CPU socket which you are going to install CPU.
6. Remove the protective socket cover from the load plate.

⚠ Caution

Do not discard the protective socket cover. Always replace the socket cover if the processor is removed from the socket.

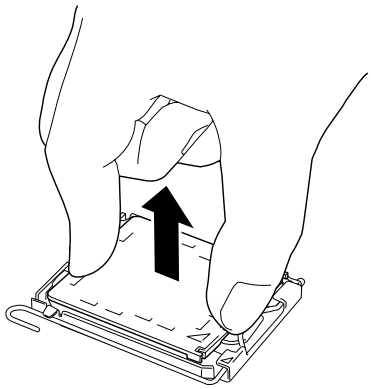

Figure 127: Removing the Protective Socket Cover

7. Open the socket lever by pushing the lever down and away from the socket.

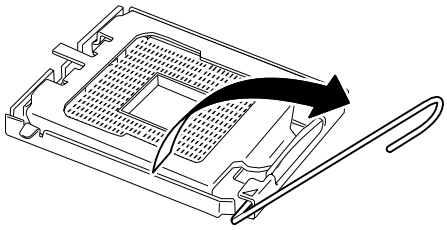

Figure 128: Unlocking the Socket

8. Lift The Load Plate.

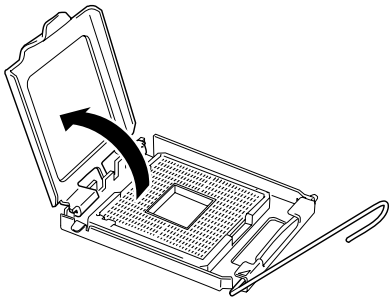

Figure 129: Lifting the Load Plate

⚠ Caution

Do not touch the socket contacts.

9. Remove the processor from the protective cover.

⚠ Caution

- Hold the processor only at the edges, being careful not to touch the bottom of the processor.
- Do not discard the protective processor cover.
- Always replace the processor cover if the processor is removed from the socket.

10. Hold the processor with your thumb and index fingers oriented as shown in the figure below.

⚠ Caution

Make sure fingers align to the socket cutouts.

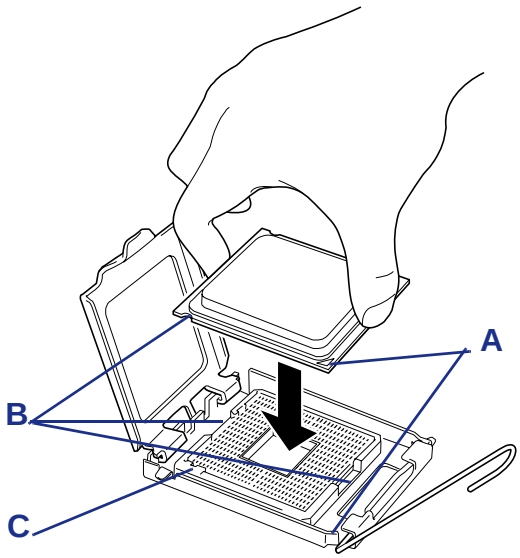

Figure 130: Holding the processor

A: Pin Marker
B: Notches
C: Key

11. Align notches with the socket.
12. Lower the processor straight down without tilting or sliding it in the socket.
13. While pressing down on the load plate, close and engage the socket lever.

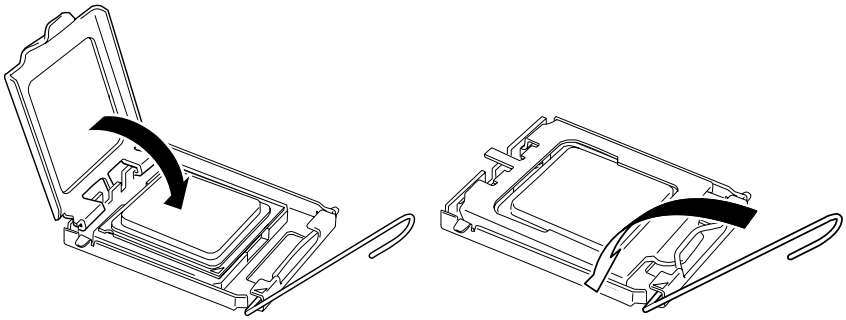

Figure 131: Socket Lever

14. Put the heat sink on CPU and fix the heat sink with four screws.

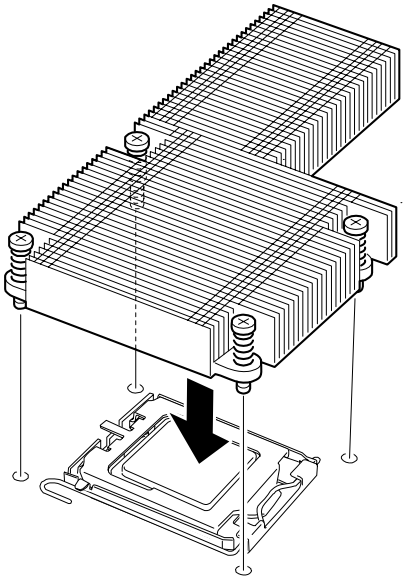

Figure 132: Securing the Heatsink

***Note**: Take care of the direction of the heat sink (see figure below)..*

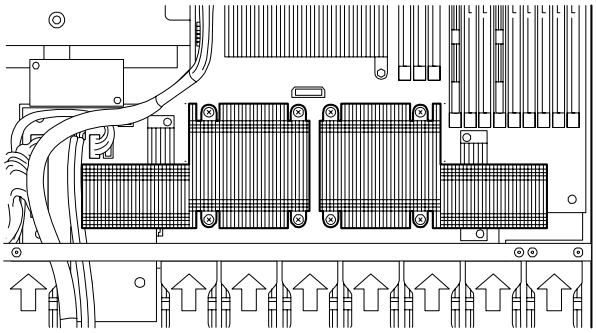

15. Make sure that the heat sink is level.

***Notes**:*

- *If the heat sink is not level, remove it, and then install it again. The following probably causes the heat sink not to be level:*
  - *–The CPU is not positioned correctly.*
  - *–All screws are not completely tightened.*
- *Do not move the secured heat sink.*

16. Lay the USB cables as shown in the figure below.

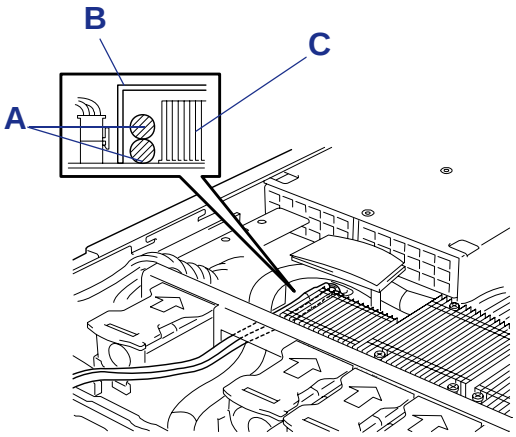

Figure 133: Routing the USB cables

A: USB cables
B: Processor duct
C: Heatsink

17. Install the processor air duct.

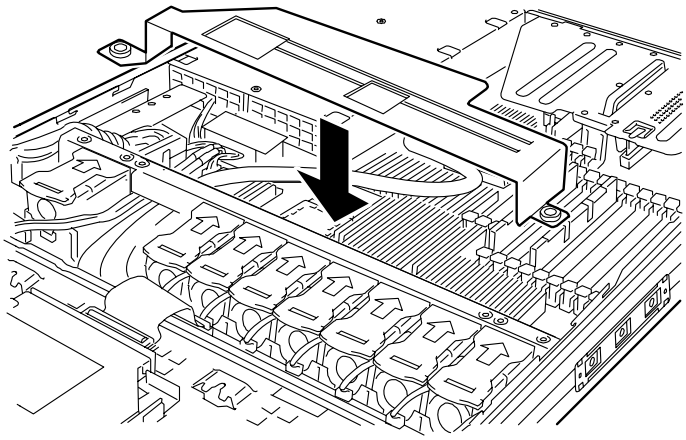

Figure 134: Installing the CPU Duct

***Note**:*

- *Place the internal USB cable inside the processor duct (see figure above).*
- *Check to see that the processor duct is firmly installed with no clearance between the duct and chassis.*

■ *Put the hard disk drive signal cable under the sub-board as figure below.*

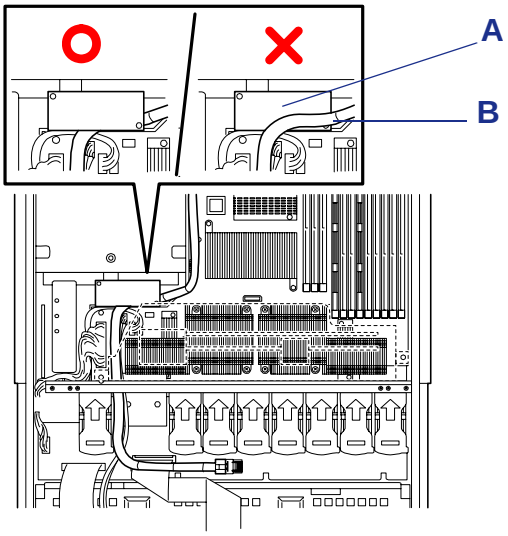

Figure 135: Routing the cable

A: Sub-board
B: Hard disk drive signal cable

18. Install the covers you removed previously.

19. Power on the server, start the SETUP utility, and set "Processor Retest" of "Processor Settings" on the Main menu to "Enable".

20. Set "Reset Configuration Data" on the Advanced menu to "Yes".

This setting is required to change the hardware configuration data. See *"BIOS Setup Utility" on page 63* for details.

21. Verify that POST displays no error messages.

If POST displays an error message, take a note on the message and see the POST error messages listed in *"POST Error Messages" on page 241*.

22. To add one CPU to the server in 1-CPU configuration to operate the server with more than one CPU, change the driver of [Computer] in the device manager to [ACPI multi-processor PC] and then update the system.

Removal

To remove the CPU, prepare the removal referring to steps 1 and 12 in the installation procedure and do the reverse procedure of steps 17 to 9.

⚠ Caution

- Do not remove any CPU unless it is failed.
- After the operation, heat may make the cool seat at the bottom of the heat sink adhere to the CPU. To remove the heat sink from the CPU, first turn the heat sink to the left and right slightly to make sure that the heat sink can be apart from the CPU. Removing the heat sink with it adhering to the CPU may cause the CPU and/or socket to be defected.

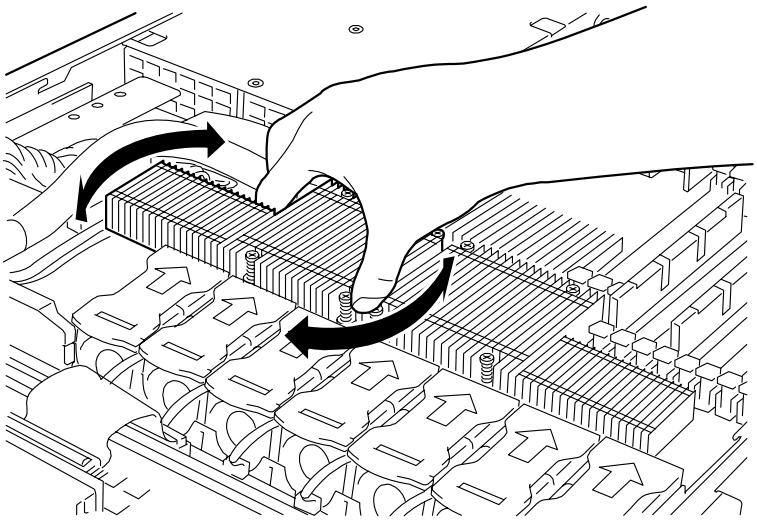

Figure 136: Removing the Heat Sink

Do the following procedure if a CPU is removed (or replaced).

1. Start BIOS Setup to select menus "Main" – "Processor Settings" – "Processor Retest" in the order to clear the error information on the removed CPU (see *"BIOS Setup Utility" on page 63*).

   When a CPU is replaced, select menus "Main" – "Processor Settings" to check that the ID and L2 Cache of the additional CPU are defined normally (see *"BIOS Setup Utility" on page 63*).
2. Set "Reset Configuration Data" on the Advanced menu to "Yes."

   This is required to update the hardware configuration information. See *"BIOS Setup Utility" on page 63* for details.

Installing and Removing a PCI Board

The server has a riser card assembly on the motherboard that enable installation of PCI boards. The riser card assembly can hole up to two PCI boards.

Insert PCI boards for network extension and file device function extension into PCI board slots in each riser card.

⚠ Caution

- The PCI board is sensitive to static electricity. Make sure to touch the metal frame of the server to discharge static electricity from your body before handling the PCI board. Do not touch the PCI board terminals or on-board parts by a bare hand or place the PCI board directly on the desk. See *"Static Precautions" on page 157*.
- Some restrictions are imposed on the combination of PCI boards which can be installed in the server. Contact your sales agent for details.
- A riser card is designed for installing only low-profile PCI boards or full-height PCI boards. Before installing a PCI board, make sure of the card specification.

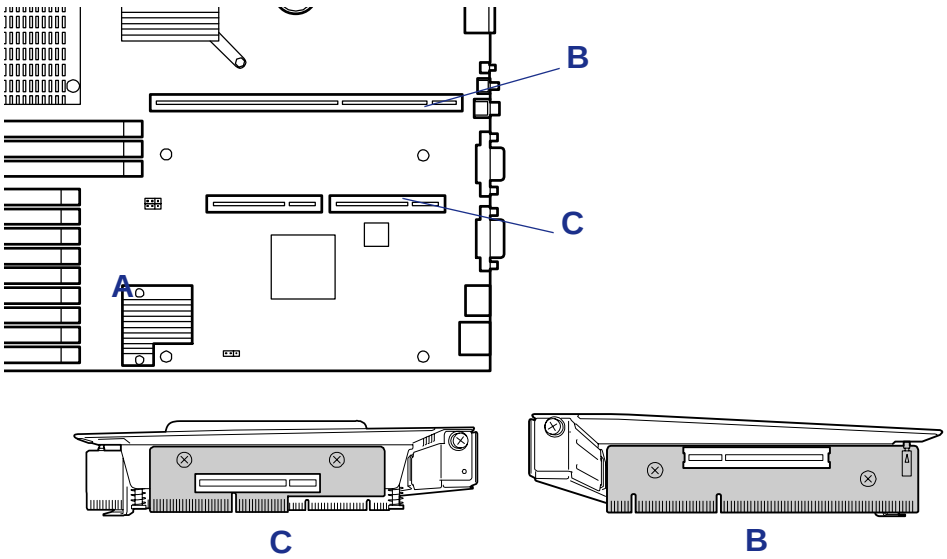

Figure 137: PCI slots

A: Motherboard
B: Riser card slot (dedicated to full-height PCI boards) - slot number 1B
C: Riser card slot (dedicated to low-profile PCI boards) - slot number 1C

***Notes**: Observe the following notes on installing/removing a PCI board:*

- *Do not touch the terminals of the riser cards and the leads of electronic components with your bare hand. Fingerprints and dust left on them cause the server to malfunction due to a connection failure or damage to the leads.*
- *A riser card is designed for installing only low-profile PCI boards or full-height PCI boards. Before installing a PCI board, make sure of the card specification.*
- *The system detects the boot devices in order of the PCI bus slots 1B (full-height PCI board) and then 1C (low-profile PCI board).*
- *The PCI devices of the same type (including onboard PCI device) may be recognized in different order from that described above, depending on the OS or the RAID system utility. Check the slot location of PCI device by PCI bus number, device number and function number shown in the table below.*

	Bus number	Device number	Function number
Onboard NIC1	C	0	0
Onboard NIC2	C	0	1
Slot 1C	18	0	X
Slot 1B	3	0	X

* On certain PCI devices, other bus numbers may be assigned.

- *Set "Disabled" for the optional ROM of a LAN device not to be booted by using the BIOS SETUP utility.*
- *If an additional LAN device is installed, it is hard to push the catch of the connector with your finger that is connected to the LAN port. Disconnect the connector pushing the catch with a standard screwdriver. At this time, be very careful for the screwdriver not to damage the LAN port or other ports.*
- *If a bootable PCI board (e.g., a RAID controller, SCSI controller, or LAN card) is additionally installed, the boot priority is changed. After the additional installation, start the BIOS SETUP utility, select [Boot] and set the new boot priority.*
- *Contact your service representative for the acceptable optional PCI board.*

Installing a PCI Board

⚠ Caution

- The full-height riser card is equipped with an "insulator (black)" to protect PCI boards. Do not remove the insulator, and handle it carefully. The insulator is not shown in the figures in this guide for simplifying the illustrations.
- Each riser card supports low-profile or full-height PCI boards. Before installing a PCI board, check the type of the PCI board.
- When installing a PCI board, check that the card connector matches the connector of the riser card.

To install a PCI board on the riser card:

1. See the section *"Preparing Your Server for Upgrade" on page 159*.
2. Pull out the server from the rack (see *"Removal" on page 49*).
3. Remove the drive cover and the logic cover.
4. Grasp a handle on the riser module assembly and lift straight up and remove the riser module assembly from the server.

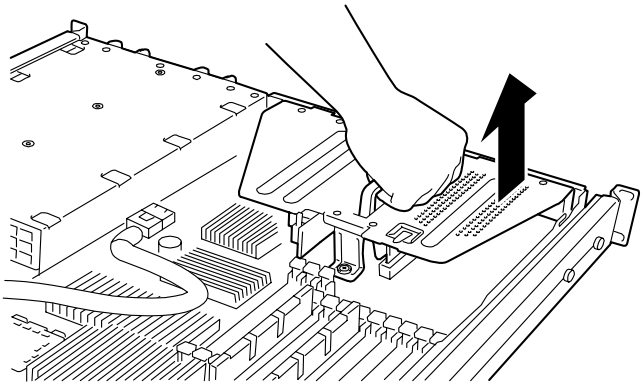

Figure 138: Removing the Riser Card Assembly

5. Remove the screw from the riser card and remove the extension slot cover.

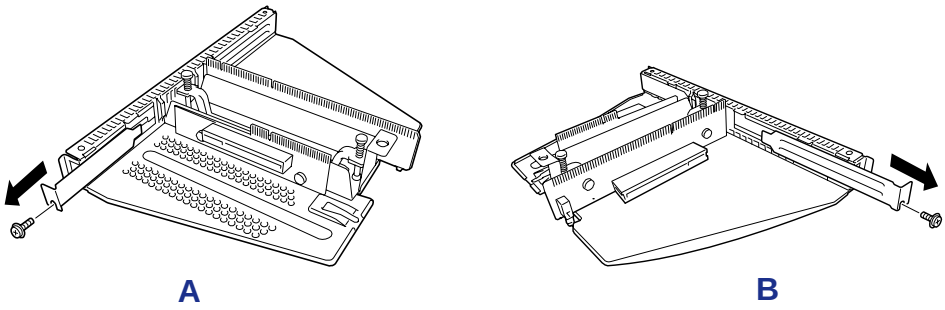

Figure 139: Removing the extension slot cover

A: Low-Profile type
B: Full-height type

6. Install the PCI board on the riser card.
Align the PCI board terminal section with the riser card slot, and firmly push the PCI board until it is fully seated.

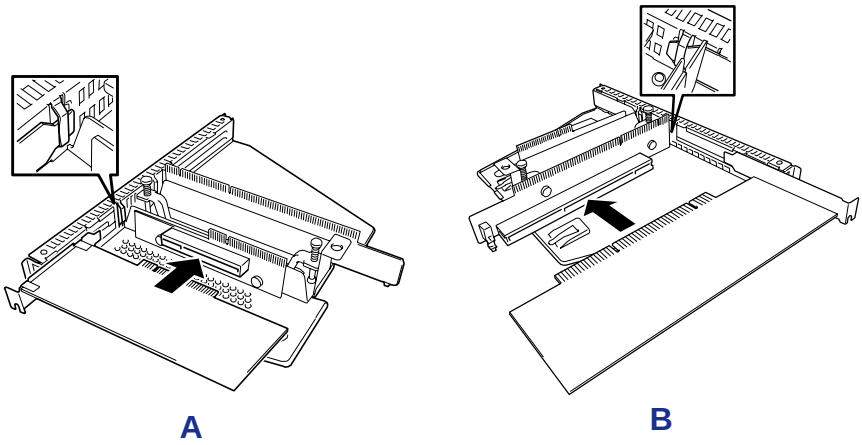

Figure 140: Installing PCI Boards into the Riser Cards

A: Low-Profile type
B: Full-height type

⚠ Caution

- Do not touch the terminals of the riser cards and PCI boards with your bare hand. Fingerprints and dust left on them cause the server to malfunction.
- If you are unable to install a PCI board correctly, remove it, and then install it again. Be careful not to apply excess force to a PCI board or riser card. Doing so may damage the card.

***Note**:*

- *Check that the end of the PCI board bracket is inserted in the frame slot of the riser card.*
- *Some PCI boards have a terminal section that extends over the mating connector.*

7. Secure the PCI board with the screw you removed in step 5.

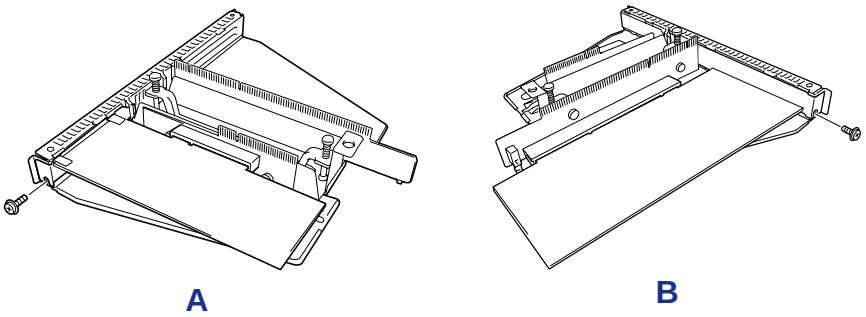

Figure 141: Securing the PCI Board

A: Low-Profile type
B: Full-height type

⚠ Caution

This step is to protect the terminals of the riser card from dust or fingerprints. Dust and fingerprints left on them cause the server to malfunction.

8. Insert the riser card assembly into the slot on the motherboard.
   Align the riser card terminal section with the slot on the motherboard, and firmly push the riser card until it is fully seated.

Notes:

- *There are catches on the riser card frame that are used to secure the riser card to the cabinet. When inserting the riser card, confirm that the catches are correctly fit into the holes on the rear of the cabinet. After the insertion, push the riser card with your fingers until you cannot see any part of the riser card terminal section. The riser card is now fully seated in the slot.*
- *Pay attention not to damage the components on the mother-board with the riser card when inserting it into the slot.*

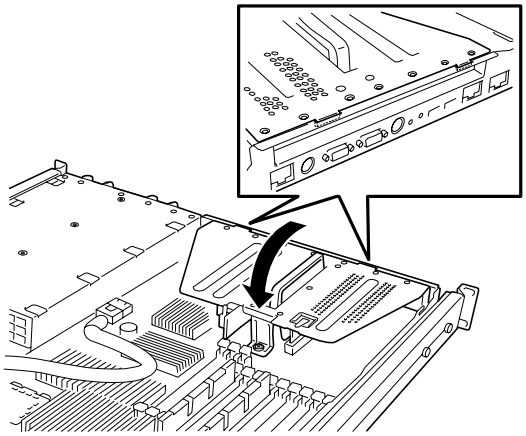

Figure 142: Inserting the Riser Card Assembly into the Motherboard

9. Install the components you removed previously.
10. Verify that POST displays no error messages.
11. If POST displays an error message, take a note on the message and see the POST error messages listed in *"POST Error Messages" on page 241*.
12. Run the BIOS SETUP utility and select "Yes" for [Advanced] ® [Reset Configuration Data].
    This setting is required to change the hardware configuration data. See *"BIOS Setup Utility" on page 63* for details.

Removing a PCI Board

Remove a PCI board in reverse order of the installation steps.

Using the Internal Hard Disk Drives in the RAID System

Using the optional RAID controller allows you to use both the hard disks in the device bays of the server and those in an optional expansion disk cabinet in a RAID system configuration.

⚠ Caution

- Making hard disks in the RAID system configuration or changing the RAID level initializes hard disks. If the hard disk to be configured in the array has your valuable data stored, make sure to make a backup copy of the data before installing the RAID controller board and configuring the array.
- At least two hard disk drives are required to configure a Logical drive.
- Use hard disks of the same capacity and performance (e.g., revolution) for each pack to configure them in the array.

***Notes**:*

- *Choose a controller corresponding to the RAID level and hard disk drives of your choice*
- *A Logical Drive (except RAID0) increases the disk reliability. However, the available capacity becomes smaller than the total hard disk drive capacity configured in the Logical Drive.*

3.5-inch Disk Model

You can build a RAID System using the Onboard RAID Controller (LSI Embedded MegaRAID) or an optional RAID Controller.

Onboard RAID Controller (LSI Embedded MegaRAID)

A RAID Controller is factory embedded in your motherboard. The RAID System is "Enabled" by default.

Optional RAID Controller

Your server can include one of the following optional RAID Controllers:

- LSILogic MegaRAID SAS 8480E Controller
- Disk Array Controller (SAS/SATA HW RAID0/1)
- Disk Array Controller (SAS/SATA HW RAID5/6)

The optional RAID Controller can control the internal hard disk drives (or external hard disk drives with the LSILogic MegaRAID SAS 8480E) as a RAID System. To use the hard disk drives in a RAID System, reconnect the hard disk drive interface cable on the motherboard.

At the factory, the interface cable is connected to the Mini SAS connector on the motherboard. Refer to the manual coming with optional RAID Controller for more information.

⚠ Caution

The RAID controller board is extremely sensitive to static electricity. Make sure to touch the metal frame of the Server to discharge static electricity from your body before handling the RAID controller board. Do not touch the RAID controller board terminals or on-board parts by a bare hand or place the RAID controller board directly on the desk. For static notes, see "Static Precautions" on page 157.

***Note**: Before installing a RAID controller board, start the SETUP utility, select [Advanced] → [PCI Configuration], and check that [Enabled] is set for the parameter [PCI Slot xx ROM] (xx: PCI slot number).*

Installation

See *"Installing a PCI Board" on page 200* and also refer to the Optional RAID Controller User Guide.

⚠ Caution

- A riser card for a low-profile PCI board differs from the one for a full-height PCI board. Before installing a PCI board, check the board specifications.
- Some RAID Controller include a LED cable connector to be used to indicate disk accesses. However, this server is not equipped with LED cable connector.
- To use internal hard disk drives in a RAID System by connecting the RAID Controller to the full-height riser card, first connect the cable, then connect the riser card with motherboard.
- When the RAID Controller is connected, the boot priority specified in the BIOS SETUP utility must be 8 or less. If specified as 9 or more, the configuration menu of RAID Controller will fail to start.

Removal

Remove the optional RAID Controller in reverse order of the installation steps.

2.5-inch Disk Model

To build a RAID System, use the Internal RAID Controller. The hard disk drive bays are connected to the Internal RAID Controller at the factory.

Standard Configuration

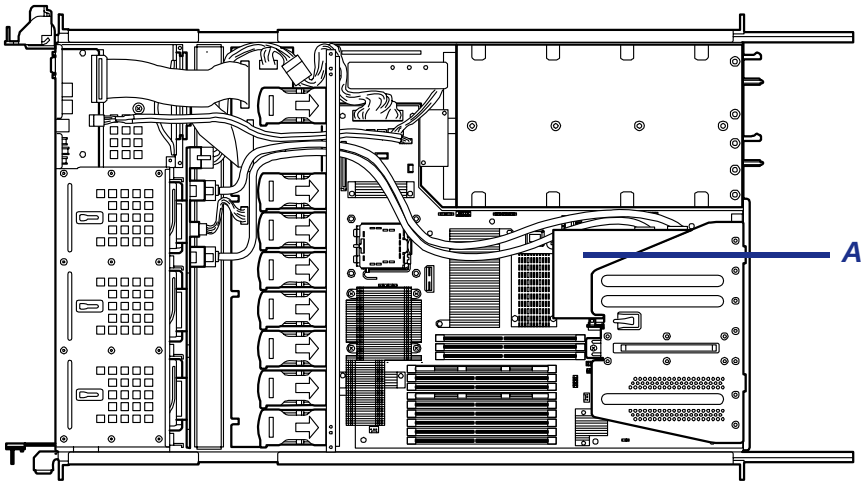

Figure 144: Internal RAID Controller (A)

Use WebBIOS to configure the RAID System.

Notice

Observe the following notes when configuring a RAID System:

- The installed hard disk drives (SAS drives or SATA drives) must have the same capacity and the same rotational speed. (The minimum number of required disks depends on the configuration of RAID (Redundant Arrays of Inexpensive [Independent] Disks).)
- Select/set a RAID level "RAID0", "RAID1", "RAID5", or "RAID6".

When installing an operating system in an internal hard disk drive, you should use "Express Setup" to perform all the procedures for the RAID System configuration, OS installation, and the OS setup.

Use Express Setup even when not installing a system. Start Express Setup, select [OS Selection] → [Others]. The installer automatically performs all the procedures for RAID System configuration, and then maintenance utility installation.

When setting up in manual mode, use the RAID System configuration utility of the onboard controller. You can start the utility during POST.

For details, see the online documentation in the ExpressBuilder DVD provided with the server. (The utility varies depending on the RAID Controller.) For details on the data transfer rate, RAID, and RAID System configuration, refer as well to the manual provided with the RAID Controller.

⚠ Caution

When an Optional RAID Controller is installed, do not let the system enter hibernation or standby mode.

Disk Expansion Unit

A disk expansion unit is an exclusive device in which up to 14 hard disk drives can be installed. (The number of hard disk drives depends on the model.)

A server containing a RAID Controller can be connected to one or two of these devices. For more information, see the manuals provided with the RAID Controller and disk expansion unit.

⚠ Caution

A disk expansion unit is provided without hard disk drives. The hard disk drives must be purchased separately.

An optional cable may be required to connect with a disk expansion unit. Refer to the manual provided with the disk expansion unit for details.

Connect the disk expansion unit, and use the RAID System configuration utility of the onboard controller to set the disk expansion unit in a RAID System (RAID0, RAID1, or RAID5). (The utility varies depending on the RAID Controller.) For more information on the settings and the methods to use, refer to the online document in the ExpressBuilder DVD provided with the server or to the manual provided with the board.

When a disk expansion unit is set in a RAID System, you can use the "Auto Rebuild" feature of the RAID Controller to restore data if one of the hard disk drives installed in the disk expansion unit fails. (Hot-swap the failing hard disk drive).

⚠ Caution

When an Optional RAID Controller is installed, do not let the system enter hibernation or standby mode.

Replacing the Battery

All motherboards use a battery to maintain system configuration information. If it fails to maintain system configuration, replace it with an identical rated battery from the same manufacturer.

Caution

Removing the battery from the motherboard causes the computer to lose system configuration information. Before removing it, run Setup and record the system configuration settings.

Use this information to restore the server after replacing the battery.

To replace the battery on the motherboard:

1. Turn off and unplug the server and any external options connected to the server.
2. Remove the top cover. *See "Removing and Replacing the Top Cover" on page 175.*
3. Locate the battery on the motherboard. *See "Motherboard" on page 30.*
4. Carefully remove the battery from the battery socket on the motherboard.

Warning

The battery may explode if it is incorrectly replaced or improperly discarded.

Use only an identical rated battery from the same manufacturer.

5. With the positive (+) side facing up, press the new battery into the socket.
6. Replace the server top cover.
7. Connect external peripherals and power cables.
8. Run Setup to reconfigure server parameters.

Problem Solving

This chapter helps you identify and solve problems that may occur during system installation or while using your system. The first section of this chapter tells you how to reset your system in the event of problems. The next few sections provide troubleshooting checklists and procedural steps that help you isolate specific system problems. The last section includes BIOS and system user information.

Warning

The DC push-button on/off switch on the front panel does not turn off completely the system AC power. +5vdc is present on the system board whenever the AC power cord is connected between the system and an AC outlet. Before doing the procedures in this manual, make sure that your system is powered off and unplug the AC power cords from the back of the chassis.

Not disconnecting power before opening your system can result in personal injury and equipment damage

Caution

Running your system with the top cover removed can damage your system components.

For proper cooling and airflow, always replace the top cover before powering on your server.

Static Precautions

An electrostatic discharge (ESD) can damage disk drives, option boards, and other components. You can provide some ESD protection by wearing an antistatic wrist strap attached to chassis ground when handling system components.

Electronic devices can be easily damaged by static electricity. To prevent damage, keep them in their protective packaging when they are not installed in your system.

Resetting the Server

There are two ways to reset the server.

⚠ Caution

Resetting the server clears the DIMM memory and the data in process.

To reset the server when it is not frozen, make sure that no processing is in progress.

■ Hard reset

Press the power switch (A) at the front of the server. (*See "Forcing a Power Shutdown" on page 61.*)

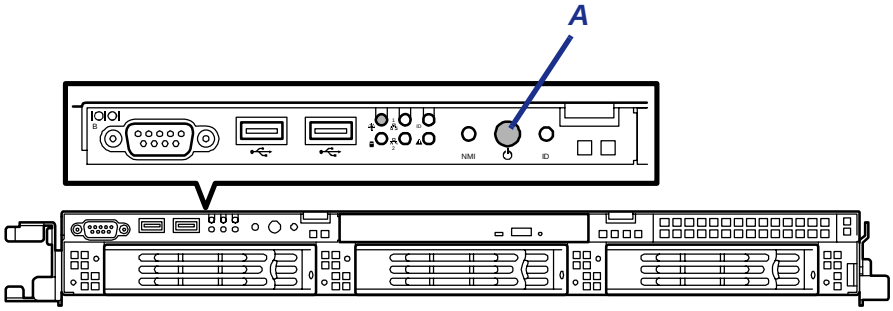

⚠ Caution

If the remote power-on function is used, cycle the power once to load the OS, and turn off the power again in the normal way.

■ Soft reset

If the server halts before starting the OS, press and hold **Ctrl** and **Alt** and press **Delete**. This restarts the server.

Troubleshooting Guide

This section provides you a guide to identify a problem and locate its source.

Warning

The system power and any peripheral devices should be turned off before connecting or disconnecting peripheral devices to or from the system.

Otherwise, you could permanently damage the system or peripheral devices.

1. Turn off the server and any peripheral devices. Disconnect all external peripherals from the system, except for the keyboard and monitor. The system´s power cord must be plugged into a grounded electrical outlet.
2. Make sure your keyboard and monitor are properly connected to the system. Turn the monitor on, then adjust its brightness and contrast controls to suit your preference (see your monitor´s documentation).
3. Turn the system on. If the power indicator does not light up, but the system seems to be operating normally, the indicator may need replacement.
4. Monitor the power-on self test (POST) execution. Each time you turn on the system, the POST checks the system board, memory, keyboard, and certain peripheral devices.
5. Check the following during the POST:
   - (Error Message Line 1)
   - (Error Message Line 2)
   - Press **F1** to continue,
   - **F2** to enter Setup
   - You should note the error and press **F2** to resume the boot-up process, or **F1** to enter Setup.
6. Errors that prevent the boot process from continuing (fatal errors) are communicated by a series of audible beeps. If this type of error occurs, record the information and refer to *"Beep Codes" on page 245*.

System Viewers

Monitor the occurrence of fault by NEC ESMPRO during the system operation.

Especially take note on whether any alert is reported to NEC ESMPRO Manager on the management PC. Check whether any alert is reported on the Operation Window, Data Viewer, or Alert Viewer of NEC ESMPRO Manager.

Problems at initial System Start-up

Problems that occur at initial system start-up are often caused by incorrect installation of components or incorrect configuration. Hardware failure is a less frequent cause.

- Are all cables properly connected and secure?
- Is AC power available at the wall outlet?
- Are the configuration settings correct in Setup? Are all drivers properly installed?
- Are all the expansion cards fully seated in their slots on the motherboard?
- Are all DIMMs installed correctly?
- Is the processor fully seated in its socket on the motherboard?
- Are switches and jumpers on the system board correct (if they have been changed from their original default settings)?
- Are all jumper and switch settings on optional add-on cards and peripheral devices set correctly? Check the documentation included with these devices for details. Ensure that there are no system resource conflicts between hardware components. (For example, two add-on cards could inadvertently share the same interrupt, resulting in a conflict.)
- Are adapter cards and disk drives correctly installed?
- Is the keyboard properly connected to the system and is it connected in the right PS/2 port?
- Is a bootable diskette installed in your system's floppy drive A:?
- Is the hard disk properly formatted or defined?
- Is the operating system properly loaded? Check the operating system documentation.

Problems After the System Has Been Running Correctly

After the system hardware and software have been running correctly, problems can indicate equipment failure. Use the checklist below to try and correct the situation.

If the problem recurs after you have checked these items, refer to the *Troubleshooting Guide* section earlier in this chapter.

- If you are running software from a diskette or an optical device, try using a new copy.
- If you are running software from a hard disk drive, make sure that all of the necessary files are installed. There may be a problem with the copy on the hard disk. Reinstall the software on the hard disk and try again.
- If problems appear intermittently, there may be a loose cable, dirt in the keyboard (if keyboard input is incorrect), or other random component failures.
- A transient voltage spike, power cut, or brownout may have occurred. Symptoms of voltage spikes include a flickering video display, unexpected system reboots, and the system not responding to user commands. If necessary, exit any open applications and shut down your system power. Reboot the system, then load the software and try again.
- Voltage spikes can occasionally cause the heads of the disk drive to contact the disk. This can corrupt or destroy data files. If you are experiencing voltage spikes on the AC electrical power line, install an uninterruptible power supply between the power outlet and the system's power cord.

Problems Running New Application Software

Problems occurring when you run new application software are usually related to the software. Faulty equipment is much less likely, especially if other software runs correctly. Use the checklist below to see if the situation may be easily corrected. If the problem persists after you have checked these items, contact the software vendor's customer service.

- Does the system meet the minimum hardware requirements for the software? Refer to the software documentation.
- Is the software an authorised copy? Unauthorised copies often do not work. Obtain an authorised copy of the software.
- If you are running the software from an optical device or a diskette, is it a good copy?
- If you are running the software from an optical device, is the disc scratched or dirty?
- Is the software correctly installed? Were all necessary procedures followed and files installed?
- Are the correct device drivers installed?
- Is the software correctly configured for the system?
- Are you using the software correctly?

Problems and Suggestions

Contact your Authorised Service Representative if the suggested actions do not solve the problem.

Table 33: Problems and Suggestions

What to do	What to do
Application software problems	Make sure all cables are installed correctly. Verify that your system hardware configuration is set correctly. In Setup, check the values against the system settings that you previously recorded. If an error is evident (wrong type of drive specified, for example), make the change in Setup and reboot the system. Record your change. Make sure the software is properly configured for the system. Refer to the software documentation for information. Try a different copy of the software to see if the problem is with the copy you are using. If other software runs correctly on the system, contact the vendor of the failing software.
Characters on screen are distorted or incorrect	Make sure the brightness and contrast controls are properly adjusted. Make sure the monitor's video signal cable and power cables are properly installed. (Shut down system power before reconnecting cables.) Make sure your monitor is compatible with the video mode you have selected. (Check your monitor's documentation.)
Characters do not appear on screen	Make sure the monitor is plugged in and turned on. Are the brightness and contrast controls properly adjusted? Make sure that the video signal cable is properly connected. (Turn the system power off before reconnecting cables). Make sure your system's video adapter card is installed, enabled. Reboot the system.
CMOS RAM settings are wrong	If system settings stored in CMOS RAM change for no apparent reason (for example, the time of day is in error), the backup battery may no longer have enough power to maintain the settings. Replace the battery.
Diskette drive light does not go on when drive is in use or is tested by POST.	Make sure the power and signal cables for the drive are properly installed. Check that the drive is properly configured and enabled in Setup.
Hard drive light does not go on when drive is in use or is tested by POST.	Make sure the power and signal cables for the drive are properly installed. Make sure the front panel connector is securely attached to the system board headers. Check that the drive is properly configured and enabled in Setup. Check the drive manufacturer's manual for proper configuration for remote hard disk drive activity.
Power on light does not go on	If the system is operating normally, check the connector between the system board and the front panel. If OK, the light may be defective.

Solving Problems

Error Messages on the Virtual LCD

The NEC EXPRESSSCOPE Engine 2 (Remote Management Controller) on your server board allows you to monitor the server status on the WEB browser-based screen of the client PC via network.

The virtual LCD (16 digits x 2 lines) in the "Host Information" area displays the POST codes and status message.

When POST detects an error, the POST error code is displayed on the virtual LCD upon completion of POST. See the table for POST error codes for details.

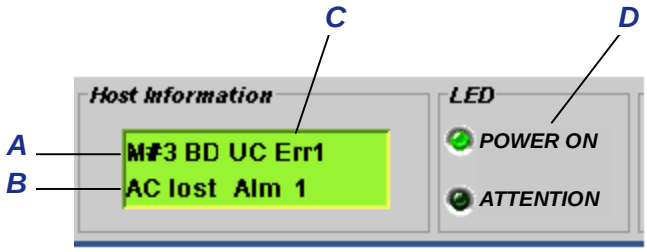

Figure 145: Virtual LCD Screen

A: Message sent from BIOS
B: Message sent from BMC
C: Virtual LCD
D: Status indicators

Figure 146: BIOS Messages (Upper Line)

On-screen message	Description	Action
XX BIOS rev YYYY	POST in progress. XX: POST code, YYYY: BIOS version	This is not an error.
CPU Reconfigured	POST completes with processor degraded.	Contact your service representative. Try the following steps to cancel the error. 1. Start BIOS SETUP. 2. Select [Main] - Processor Settings] - [Processor Retest] - [Yes]. 3. Select [Exit] - [Exit Saving Changes].

Figure 146: BIOS Messages (Upper Line)

On-screen message	Description	Action
Mem Reconfigured	POST completes with memory degraded.	Contact your service representative. Try the following steps to cancel the error. 1. Start BIOS SETUP. 2. Select [Advanced] - [Memory Configuration] - [Memory Retest] - [Yes]. 3. Select [Exit] - [Exit Saving Changes].
Memory C-Err XX	A correctable error frequently occurs in DIMM #XX.	Contact your service representative.
Memory U-Err XX	An uncorrectable error has occurred in DIMM #XX.	
PCI Bus PERR XX	A PERR has occurred in the PCI bus XX.	
PCI Bus SERR XX	A SERR has occurred in the PCI bus XX.	
Mem Err Disable	A correctable memory error frequently occurred.	
Prepare to Boot	POST completed normally.	This is not an error

Figure 147: BMC Messages (Lower Line)

On-screen message	Description
240VA Power Down	Power supply failure occurred.
BB +1.5v Alm XX	Voltage alarm occurred on the motherboard. XX=09: high voltage (fetal) XX=07: high voltage (warning) XX=02: low voltage (warning) XX=00: low voltage (fetal)
BB +1.8v Alm XX	
BB +3.3v Alm XX	
BB +5.0v Alm XX	
BB +1.2v Alm XX	
BB P_Vtt Alm XX	
BB temp1 Alm XX	motherboard thermal error occurred. XX=09: high voltage (fetal) XX=07: high voltage (warning) XX=02: low voltage (warning) XX=00: low voltage (fetal)
DUMP request!	Dump switch is pressed.
OS Shutdown Alm	OS Shutdown Alm occurred.
Power On Cnt Alm	Power Supply Failure occurred.
Power Unit 1 Alm	Power unit #1 Failure occurred.

Figure 147: BMC Messages (Lower Line)

On-screen message	Description
Power Unit 2 Alm	Power unit #2 Failure occurred.
Proc missing	Processor was not found.
Proc 1 T-Trip	Thermal Trip occurred on processor #1 or #2. the system is forcibly turned off.
Proc 2 T-Trip	
Proc 1 Therm % XX	Processor #1 or #2 thermal error occurred.
Proc2 Therm % XX	XX=09: high temperature (fetal) XX=07: high temperature (warning) XX=02: low temperature (warning) XX=00: low temperature (fetal)
Proc1 VccpAlm XX	Voltage alarm occurred on processor #1 and #2.
Proc2 VccpAlm XX	XX=09: high temperature (fetal) XX=07: high temperature (warning) XX=02: low temperature (warning) XX=00: low temperature (fetal)
Processor 1 IERR	IERR occurred on processor #1 or #2.
Processor 2 IERR	
SMI timeout	SMI timeout occurred.
Sys Fan 1 Alarm	FAN#1 alarm occurred.
Sys Fan 2 Alarm	FAN#2 alarm occurred.
Sys Fan 3 Alarm	FAN#3 alarm occurred.
Sys Fan 4 Alarm	FAN#4 alarm occurred.
Sys Fan 5 Alarm	FAN#5 alarm occurred.
Sys Fan 6 Alarm	FAN#6 alarm occurred.
Sys Fan 7 Alarm	FAN#7 alarm occurred.
Sys Fan 8 Alarm	FAN#8 alarm occurred.
Sys Fan 9 Alarm	FAN#9 alarm occurred.
Sys Fan 10 Alarm	FAN#10 alarm occurred.
Sys Fan 11 Alarm	FAN#11 alarm occurred.
Sys Fan 12 Alarm	FAN#12 alarm occurred.
Sys Fan 13 Alarm	FAN#13 alarm occurred.
Sys Fan 14 Alarm	FAN#14 alarm occurred.
Sys Fan 15 Alarm	FAN#15 alarm occurred.

Figure 147: BMC Messages (Lower Line)

On-screen message	Description
VBAT Alm XX	Voltage alarm in lithium battery occurred. XX=09: high voltage (fetal) XX=07: high voltage (warning) XX=02: low voltage (warning) XX=00: low voltage (fetal)
WDT timeout	Watchdog timer timeout error occurred.

Problems with the Server

Fail to power on the server:

- Is the server is properly supplied with power?
  - Check if the power cord is connected to a power outlet (or UPS) that meets the power specifications for the server.
  - Check the power cord for broken shield or bent plugs.
  - Make sure the power breaker for the connected power outlet is on.
  - If the power cord is plugged to a UPS, make sure the UPS is powered and it outputs power. See the manual that comes with the UPS for details.
    Power supply to the server may be linked with the connected UPS using the CMOS Setup utility of the server.
    <Menu to check: [Advanced] - [AC-LINK]>

- Did you press the POWER/SLEEP switch?
  - Press the POWER/SLEEP switch on the front of the server to turn on the power (the POWER/SLEEP lamp lights).

Fail to power off the server

- Is the power switch enabled?
  - Restart the server and start the BIOS setup utility

- Is the server running in secure mode?
  - The power switch is disabled in the Secure Mode (Forced shutdown is also not available). To release the Secure Mode, enter the password specified with the BIOS Setup utility.

No screen display appears and beep occurs.

- Is the DIMM board installed securely?
  - Check whether the DIMM board is inserted into the mating connector securely.
  - Check whether DIMMs of different specifications are installed in the specific bank.

- DIMMs must be populated in pairs and in the following order:
  11 and 21, 31 and 41, 12 and 22, 32 and 42, 13 and 23, and 33 and 43.
- Installed DIMMs must be the same speed and must all be registered.
- Take a note of beep code pattern, and take appropriate action according to the table listed in *"Beep Codes" on page 245*.
- Make sure the jumper switches have been returned to their original positions after CMOS clearing. See "Configuring motherboard Jumpers" in Chapter 4 for the positions of the jumper switches.

POST fails to complete:

- Is the DIMM board installed?
  - At least two DIMM boards are required for operation.
  - DIMMs must be populated in pairs and in the following order:
    11 and 21, 31 and 41, 12 and 22, 32 and 42, 13 and 23, and 33 and 43.
  - Installed DIMMs must be the same speed and must all be registered.
- Is the memory size large?
  - The memory check may take a few seconds if the memory size is large. Wait for a while.
- Did you perform any keyboard or mouse operation immediately after you started the server?
  - If you perform any keyboard or mouse operation immediately after start-up, POST may accidentally detect a keyboard controller error and stops proceeding. In such a case, restart the server once again. Do not perform any keyboard or mouse operation until the BIOS start-up message appears when you restart the server.
- Does the server contain appropriate memory boards or PCI devices?
  - Operation of the server with unauthorized devices is not guaranteed.

Fail to access to internal or external devices (or such devices fail to operate):

- Are cables properly connected?
  - Make sure that the interface cables and power cord are properly connected. Also make sure that the cables are connected in the correct order.
- Is the power-on order correct?
  - When the server has any external devices connected, power on the external devices first, then the server.
- Did you install drivers for connected optional devices?
  - Some optional devices require specific device drivers. Refer to the manual that comes with the device to install its driver.

- Is BIOS configuration correct?
  - Some devices connected to the serial or parallel port may require I/O port address or operation mode settings. Refer to the manual that comes with the board for details to make correct settings.

The Power switch and sleep features are disabled:

- Is the POWER switch masked by the BIOS feature?
  - The BIOS can disable power-off with the POWER switch after the operating system is started (including shutdown by pressing the POWER switch for at least four seconds).
    Run the BIOS SETUP utility to change settings.

The keyboard or mouse fails to operate:

- Is the cable properly connected?
  - Make sure that the cable is connected to the correct connector on the rear of the server.
  - The keyboard or mouse does not operate if it is connected when the server is powered (not applicable to USB devices). Power of the server first and connect it properly.
- Is the BIOS configuration correct?
  - The keyboard and mouse may have been disabled with the BIOS SETUP utility of the server. Check the settings with the BIOS SETUP utility.
- Are the server drivers installed?
  - Refer to the manual that comes with your OS to check that the keyboard and mouse drivers are installed. (These drivers are installed along with the OS.) Some OS's allow you to change the keyboard and mouse settings. Refer to manual that comes with your OS to check that the keyboard and mouse settings are correct.

Fail to access to the optical disc:

- Is the optical disc properly set in the optical disc drive tray?
  - The tray is provided with a holder to secure the optical disc. Make sure that the optical disc is placed properly in the holder.
- Is the optical disc applicable to the server?
  - The optical disc for Macintosh is not available for use.
  - The playback of an optical disc which does not conform to the optical disc standards is not guaranteed.
- Is the optical disc drive bay correctly installed?

- Reinstall the optical disc drive bay.

Inserted the correct optical disc *but an error message is displayed:*

```
The CD-ROM is not inserted or the wrong CD-ROM is inserted.
Please insert the correct CD-ROM.
OK
```

- Is the data side of the optical disc dirty or injured?
  - Take the optical disc out of the optical disc drive, check that it is not dirty or injured, reset and click [OK].

Fail to access the hard disk

(Refer to the documentation supplied with the RAID controller.)

- Is the hard disk applicable to the server?
  - Operation of any device that is not authorized by Bull is not guaranteed.
- Is the hard disk properly installed?
- Is the hard disk properly configured?

Fail to access the (internal or external) SCSI devices:

- Is the SCSI device applicable to the server?
  - Operation of any SCSI device that is not authorized by Bull is not guaranteed.
- Is the cable connection changed?
- Are SCSI devices properly configured?
  - When the server has external SCSI devices connected, devices settings, including SCSI ID and terminator, are required. Refer to the manual that comes with the SCSI device for details.
- Is cable length exceeded?
  - Refer to the manual that comes with the SCSI device for details.
- Are the optional SCSI controllers properly configured?
  - When the server has an optional SCSI controller installed and SCSI devices connected to it, use the BIOS Setup utility that comes with the optional SCSI controller for proper configuration. See the manual that comes with the optional SCSI controller for details.

Event logs in using Intel Network adapter teaming

Event Type:	Warning
Event Source:	IANSMiniport
Event Category:	None

Event ID:	11
Description:	Adapter link down: Intel(R)PRO/1000 ----

Event Type:	Warning
Event Source:	IANSMiniport
Event Category:	None
Event ID:	13
Description:	Intel(R)PRO/1000 ---- has been deactivated from the team.

Event Type:	Error
Event Source:	IANSMiniport
Event Category:	None
Event ID:	16
Description:	Team #0: The last adapter has lost link. Team network connection has been lost.

Event Type:	Warning
Event Source:	IANSMiniport
Event Category:	None
Event ID:	22
Description:	Primary Adapter does not sense any Probes: Intel(R)PRO/1000 ---- Possible reason: partitioned Team.

Above-mentioned event log will appear when the system starts. There is no problem in LAN driver operation.

The server is not found on the network:

- Is the LAN cable connected?
  - Make sure to connect the LAN cable to the network port on the rear of the server. Also make sure that the LAN cable to use conforms with the network interface standard.
- Is the BIOS configuration correct?
  - The internal LAN controller may be disabled with the BIOS SETUP utility of the server. Check the setting with the BIOS SETUP utility.
- Have the protocol and service already configured?

- Install the distinctive network driver for the server. Make sure that the protocol, such as TCP/IP, and services are properly specified.

■ Is the transfer speed correct?

- Open the network property dialog box in control panel to specify the "Link Speed & Duplex" value the same as the value specified for HUB.

Wake on LAN does not start from standby state.

■ Is Hub set to Auto-Negotiation? Or, Is the client set to Auto-Negotiation/optimum speed?

- For both hub and client, Wake on LAN does not start from the standby state if the speed is fixed to 1000Mbps.

RAID System and RAID Controller

Check the following if the server configured with a RAID system does not operate properly or if an utility does not operate correctly.

Fail to install the OS:

■ Is the RAID controller configured?

- Provide proper configuration for the RAID controller by using the LSI Software RAID Configuration Utility or WebBIOS.

Fail to start the OS:

■ Did the BIOS of the RAID controller change?

- Set the BIOS correctly using using the LSI Software RAID Configuration Utility or WebBIOS.

■ Does the POST recognize the RAID controller?

- Make sure that the RAID controller is connected correctly, and power on the server.
- The RAID controller on the motherboard may be faulty. Contact your service representative.

Rebuild fails:

■ Is the capacity of the hard disk drive to be rebuilt sufficient?

- The hard disk drive to be rebuilt should have a capacity equal to the failed hard disk drive capacity.

■ Is RAID0 configured?

- RAID0 has no data redundancy, and therefore, Rebuild is disabled in the RAID0 configuration. Replace the failed hard disk drive, create the configuration data again and initialize the hard disk drives. Then recover the data by using backup data.

Auto rebuild fails:

■ Was a sufficient time taken for hot swap of hard disk drives?

- To allow the auto rebuild to operate correctly, wait at least 90 seconds between the removal of the failed hard disk drive and the installation of a new hard disk drive.

■ Is the configuration correct?

Check the auto rebuild settings by using the LSI Software RAID Configuration Utility.

<Menus to check: Top menu - [Objects] - [Adapter] - [Auto Rebuild]>

* Auto Rebuild cannot be specified in WebBIOS.

A hard disk drive fails:

- Contact your service representative.

Cannot enter standby:

- If you use the LSI Embedded MegaRAID™, the system may not enter standby if there is a heavy I/O.

Cannot enter Hibernation:

- If you use the LSI Embedded MegaRAID™, the system may not enter standby if there is a heavy I/O.

Physical device is not correctly displayed on Universal RAID Utility

- If you use the LSI Embedded MegaRAID™, some information on a physical device may not be correctly displayed on the Universal RAID Utility. It is not a problem.

Problems with Windows

In some cases, an event log is registered as follows when you install Windows Server 2003 x64 Editions.

Source: DCOM

Category:Error

Event ID: 10016

Description: The application-specific permission settings do not grant Local Activation permission for the COM server application with CLSID {555F3418-D99E-4E51-800A-6E89CFD8B1D7} to the user {NT AUTHORITY\LOCAL SERVICE} SID {S-1-5-19}.

This security permission can be modified using the component Services administrative tool.

- The system can be operated normally.

In some cases, an event log is registered as follows when you install Windows Server 2003 x64 Editions.

Event Source:Service Control Manager

Event Type:Error

Event ID:7011

Description:Timeout (30000 milliseconds) waiting for a transaction response from the IMAP4Svc service.

- If this event disappears when the system is rebooted, the system can be operated normally.

In some case, an event log is registered as follows when you operate Windows Server 2003 R2.

Source: IPMIDRV

Type: Error

Event ID: 1001

Description: The IPMI device driver attempted to determine if the system supported an IPMI BMC device. The driver attempted to detect the presence of the IPMI BMC by searching the SMBIOS for Type 38 record. But either no record was found or the record was not compatible with the version of the device driver.
If a SMBIOS Type 38 record was detected, the Dump Data field of the event contains a binary representation of the record.

- If you use the "Hardware Management" feature provided by Windows Server 2003 R2, above-shown event log will be registered.

Windows Product Activation

“This copy of Windows must be activated with Microsoft before you can continue. You cannot log on until you activate Windows. To shut down the computer click Cancel.”

In Windows Server 2003, the above message will be displayed if you use the operating system without executing the license authentication. Select "Yes", and execute the procedure for license authentication.

Cannot install the operating system correctly.

■ Did you check the notes on installing the operating system?

During installation, the following warning is registered in the System Log of the Event Viewer:
Error detected on the device \Device\CdRom0 during the paging operation.

- There is no problem on this issue.

Fail to start the OS:

- Is a floppy disk in the floppy disk drive?
  - Take out the floppy disk and restart the server.
- Is the ExpressBuilder DVD-ROM in the optical disc drive?
  - Take out the ExpressBuilder DVD-ROM and restart the server.
- Is the OS broken?
  - Use recovery process to recover the system. (See "Recovery for Windows 2000 System" in this Chapter.)

The OS presents unstable operation:

- Did you update the system?
  - Installing a network drive after installation of the OS may cause unstable operation. Use the ExpressBuilder DVD-ROM to update the system.

The system does not restart automatically when a stop error occurs, though the system is adjusted to automatically restarting:

- When the system does not restart automatically, restart it manually.

The system restarts automatically when a stop error occurs, though the system is NOT adjusted to automatically restarting:

- There is no problem about this issue. Check the System Event Log to check that STOP error occurred.

Cannot turn the power OFF at the blue screen:

- If you want to turn off the power at the blue screen, execute forced shutdown (forced shutdown: continue to press POWER/SLEEP switch for 4 seconds). The power will not be turned off if you press the switch for less than 3 seconds.

The PXE boot (network boot) fails or the server is not found on the network:

- Is the cable connected properly?
  - Connect the proper cable to the network port on the rear of the Express server. In addition, make sure that the used cable conforms to the network interface standard.
- Is BIOS configuration correct?

- The internal LAN controller may be disabled with the CMOS Setup utility of the server. Check the setting with the BIOS setup utility.

■ Have the protocol and service already configured?

- Install the distinctive network driver for the server. Make sure that the protocol, such as TCP/IP, and services are properly specified.

■ Is the transfer speed correct?

- Open the network property dialog box in control panel to specify the link speed and duplex value the same as the value specified for HUB.

■ The Telnet Service is not installed.

- Adjust the computer name to 14 characters or less, and then install the Telnet Service as described below:

1. Click [Run] on Start menu.

2. Type "tlntsvr /service" in the [Open] box, and click [OK].

3. Click Start menu, point to [Control Panel] and click [Computer Management] and then click the [Services] to specify whether the Telnet Service is registered.

Once the installation of Telnet Service is finished, you can reset the computer name to 15 characters or more.

Power ON/OFF (Wake On LAN) feature does not work:

Immediately after the AC power is turned on, the Remote Power ON/OFF feature (Wake ON LAN) is disabled. Start Windows 2003 once, provide the settings shown below, then shutdown the system.

After restart, the Remote Power On/Off feature will be available except when the AC power is turned off.

1. Select [Start] → [Administrative Tools] → [Computer Management].

2. Select Device Manager, double-click [Intel(R) PRO/1000EB Network Connection with I/O Acceleration #n] under Network Adapter, and specify as follows in [Detail] tab.

PME: [ON]

Wake On:[Magic Packet]

Fail to start the OS with the /3GB switch

System often fails to start the OS with the /3GB switch.

In this case, please adjust the capacity of the user mode area using the /userva switch in reference to the following URL.

http://support.microsoft.com/kb/316739/en

Problems with ExpressBuilder

When the server does not boot from the ExpressBuilder DVD, check the following:

- Did you set the ExpressBuilder during POST and restart the server?
  - If you do not set the ExpressBuilder during POST and restart the server, an error message will appear or the OS will boot.

- Is BIOS configuration correct?
  - The boot device order may be specified with the CMOS Setup utility of the server. Use the CMOS Setup utility to change the boot device order to boot the system from the Optical Disc drive first.
    <Menu to check: [Boot]>

If [OS installation ***default***] is selected at BOOT Selection screen, following message is displayed.

After this message appears, check the error and take the appropriate corrective action according to the message listed in the table below.

Message	Cause
This ExpressBuilder version was not designed for this computer. Insert the correct version and click [OK]. (When you click [OK], the computer reboots.)	This ExpressBuilder version is not designed for this server. Execute the ExpressBuilder on the compliant server.
ExpressBuilder could not get the hardware parameters written in this motherboard. This version is not designed for this computer or the motherboard may be broken. (When you click [OK], the computer reboots.)	This message is shown when ExpressBuilder could not find system-specific information because of motherboard exchange and so on.
The hardware parameters written in this motherboard are incorrect. This version is not designed for this computer or the motherboard may be broken.	

Problems with Express Setup

The system partition is created by size smaller than specified value.

- In Express Setup, there are some cases that the system partition created by size about 8MB smaller than specified size.
  It is not a problem in operating the system.

Following message appeared when you tried to install Express Setup to the hard disk drive that has smaller capacity than the specified partition size:

- Cannot continue the setup.

  Specify smaller partition size than the capacity of connected hard disk drive, and then retry the setup.

Specified to join the Domain, but the system is installed as Workgroup.

- When the setup fails to join the Domain during the installation, it will install the system as Workgroup. Open [System] in Control Panel to specify joining the Domain.

Unable to specify the details of Network adapter.

- In Express Setup, you can not specify the details of Network adapter. Specify them from Control Panel after starting Windows.

Problems with Windows Autorun Menu

Cannot read online document:

- Do you have Adobe Reader installed correctly in your system?

  Some online documents are supplied with PDF format. To read the document of PDF format, Adobe Reader is required in your system.

- Is the operating system Windows XP SP2?

  With Windows XP SP2, the following information may appear in browser.

  "To help protect your security, Internet Explorer has restricted this file from showing active content that could access your computer. Click here for options..."

  1. Click the Information Bar.
     The shortcut menu appears.
  2. Click [Allow blocked content].
     The security alert dialog box appears.
  3. Click [Yes] on dialog box.

The menu fails to appear:

- Is your system Windows XP or later, or Windows 2003 or later?
  - The Windows Autorun menu is supported by Windows XP/Windows 2003 or later.
  - If your system runs on Windows Autorun Menu on Windows 2000 system, you need to setup IE6.0 before using Windows Autorun Menu.
- Is **Shift** pressed?
  - Setting the DVD/CD-ROM with **Shift** pressed down cancels the Autorun feature.
- Is the system in the proper state?
  - The menu may not appear depending on the system registry setting or the timing to set the DVD/CD-ROM. In such a case, start the Explorer and double-click the icon of the optical disc drive.

Some menu items are grayed-out:

- Is your system environment correct?
  - The menu items are grayed-out when the logon user does not have the authority of the Administrator or the system does not meet the requirements to install the application. Login with the user having the proper authority on the proper system, and try again.

Collecting Dr. Watson Diagnostic Information

Dr. Watson collects diagnostic information related to application errors. The location to save the information can be specified as you like.

Memory Dump

If an error occurs, the dump file should be saved to acquire necessary information.

If you saved the dump to DAT, write down that it is saved as "NTBackup" or "ARCServe" on the label. You can specify the location to save the diagnostic information as you like...

Caution

- Consult with your sales agent before dumping the memory. Dumping the memory while the server is in process may affect the system operation.
- Restarting the system due to an error may display a message indicating insufficient virtual memory. Ignore this message and proceed. Restarting the system may result in dumping improper data.

Preparing for Memory Dumping

Memory dumping with the DUMP switch may disable the server to restart. In such a case, it is required to force the server to shut down. This forced shutdown, however, is not available if "Enable" is selected for "Power Switch Inhibit" on the Security menu of the BIOS setup utility, SETUP, because this setting disables POWER switch operation.

Follow the procedure below to change the setting to enable the forced shutdown and restart of the server.

1. Power on the server and start the BIOS setup utility, SETUP.
2. Select "Disable" for "Power Switch Inhibit" in the Security menu.
3. Save the configuration data and exit the SETUP.

Saving the Dump File

Press the DUMP switch to save the dump file when an error occurs. Insert a metal pin (a straightened large paper clip will make a substitute) into the switch hole to press the DUMP switch.

Pressing the DUMP switch saves the dump file in the specified directory. (Memory dumping may not be available when the CPU stalls.)

Warning

Do not use a toothpick or plastic stick that could break easily. Do not use any pin easily broken such as a toothpick or plastic pin.

Recovery for Windows Server 2003 x64 Editions and Windows Server 2003

If the system fails to start, recover the system with the recovery console. This method should be used only by a system administrator or a user with expert knowledge.

See the Online Help for details.

Maintenance Tools

Starting the Maintenance Tools

The Maintenance Tools starts according to the following procedure.

1. Turn on first the peripheral devices and then the server.
2. Insert the ExpressBuilder DVD supplied with your server into the optical disc drive of your server.
3. Press **Ctrl**, **Alt**, and **Delete** to reboot the server from the ExpressBuilder. (You may also turn off and then on again to reboot the server.)

   System boots up displaying the Boot Selection menu.

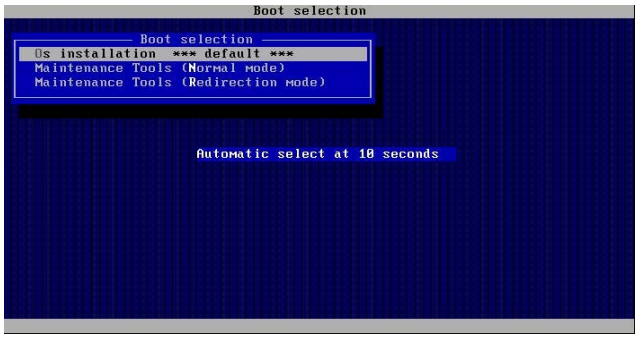

Figure 148: Boot Selection Menu

Caution

The initial selection of the menu is "OS installation".
"OS installation" starts automatically after the Boot Selection menu has been displayed.

4. When using a local console, "Maintenance Tools (Normal mode)" is selected.

   When using the remote console, "Maintenance Tools (Redirection mode)" is selected.

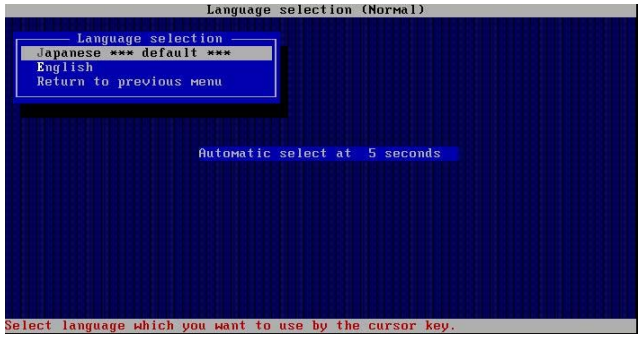

⚠ Caution

The initial selection of the menu is "Japanese".
"Japanese" starts automatically if no other choice is made during the following 5 seconds.

5. Select "English", and the following tool menu is displayed.

Figure 149: Using a local console

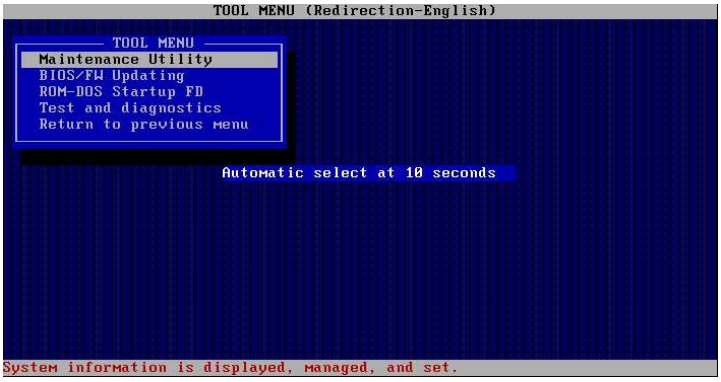

Figure 150: Using a remote console

Function of the Maintenance Tools

The following functions can be executed via the Maintenance Tools.

Maintenance Utility

The Off-line Maintenance Utility is an OS-independent maintenance program.

If you are unable to start the OS-dependent NEC ESMPRO to troubleshoot a problem, the Off-line Maintenance Utility can be used.

⚠ Caution

- The Off-line Maintenance Utility is intended to be used by your service representative. The ExpressBuilder DVD you have created contains a file that describes the operation of the utility, but we recommend you do not attempt to use the utility by yourself. Contact your service representative and follow their instructions.
- See the on-line help for more information on the Off-line Maintenance Utility. For further information, ask your service representative.

The Off-line Maintenance Utility provides the following features.

- IPMI Information Viewer

  Allows to view the system event log (SEL), sensor data record (SDR), and the filed replaceable unit (FRU) and to make a backup copy of them.

  Using this feature, you can find system errors and events to determine a maintenance part.

- BIOS Setup Viewer

  Allows to export the current configuration data defined with the SETUP utility to a text file.

- System Information Viewer

  Allows to view information on the processor and the BIOS and to export it to a text file.

- System Information Management

  Allows to make a back-up copy of your data.

  Without the backup data, the system-specific information and/or configuration may not be restored.

  We recommend that only authorized personnel be allowed to restore the backup data.

- System Management

  The parameters of BMC (Baseboard Management Controller) are set for remote control and alert.

BIOS/FW Updating

This menu allows you to update software modules such as the BIOS and firmware of the server using the update disk (3.5-inch floppy disk) that is distributed by your customer service representative.

Reboot the system from the floppy disk, and the various BIOS and firmware programs are updated.

⚠ Caution

Do not turn off the server while the update program is running. If this update process is interrupted, the system is unable to start.

ROM-DOS startup FD

Creates a support disk used to start the ROM-DOS system.

Test and diagnostics

Executes various tests on the server system to check if the server functions are normal and if the connection between the server and the additional board is normal.

Once the Test and diagnostics have been executed, a system check program assigned to each model starts.

Maintenance Tools with Remote Console

This subsection describes the procedure for using the Maintenance Tools via a remote console.

Maintenance Tools contains a remote console feature that allows the system administrator to set up the server from the management workstation (management PC) via the network or the server's COM B (serial) port.

⚠ Caution

- Do not use this feature on any other computer than the server, or on any other server obtained without a Express-Builder. Doing so may cause a failure of the server.
- Select "Maintenance Tools (Redirection mode)" for the remote console in the "Boot Selection" menu.
- The system may fail to operate with a transfer rate of 115.2 Kbps for serial console redirection. Specify a transfer rate different than 115.2 Kbps.

Starting

Use one of the following two methods to start the server.

- Run the Maintenance Tools from the management PC via the LAN.
- Run the Maintenance Tools from the management PC via a direct connection (COM2)

⚠ Caution

Do not change the boot device order in the BOOT menu of the BIOS SETUP. ExpressBuilder cannot be used if the optical disc drive is not the first device specified in the boot order.

***Notes**:*

The following items of the BIOS setup information will be set as shown below.

- *LAN Controller:[Enabled]*
- *Serial Port A:[Enabled]*
  Base I/O Address:[3F8]
  Interrupt:[IRQ 4]
- *Serial Port B:[Enabled]*
  Base I/O Address:[2F8]
  Interrupt:[IRQ 3]
- *BIOS Redirection Port:[Serial Port B]*
  - Baud Rate:[19.2K]
  - Flow Control:[CTS/RTS]
  - Console Type:[PC ANSI]

Error Messages

Error Messages

If an error occurs in the server, an error message appears on the display unit connected to the server.

Error Messages after Power-on

Powering on the server automatically starts the self-diagnostic program, POST (Power On Self-Test). When the POST detects any error, it displays an error message and its measure on the display unit.

Follow the table below to troubleshoot such errors. However, even when there is no hardware failure, use of the keyboard or mouse at the following timing causes the POST to assume a keyboard controller error and stop processing.

- Immediately after the server is powered
- Immediately after the system is rebooted in response to a keyboard instruction (simultaneous key entry of **Ctrl** + **Alt** + **Delete**)
- Immediately after the system is rebooted in response to an OS instruction
- During hardware initialization following restart of the POST

When the POST detects a hardware failure due to the above reason, restart the server once again. If the same error message reappears, you may assume there is no hardware error. To ensure normal operation of the server, however, make sure to follow the following restrictions.

- Do not make any keyboard entry or use the mouse before the memory count appears on the screen following the server power-on.
- Do not make any keyboard entry or use the mouse before the start-up message of the SCSI Configuration Utility appears on the screen following the server reboot.

Note: Note the on-screen message before contacting your sales agent. The alarm indication would be a great help for maintenance.

POST Error Messages

When POST detects an error, it displays an error message on the display unit screen. The following table lists error messages and actions to take.

Note: Note the displayed messages before consulting with your sales agent. Alarm messages are useful information for maintenance.

Table 34: POST Error Messages

Error code	Error message	Recommended Action
0200	Failure Fixed Disk	Contact your service representative.
0210	Stuck Key.	Disconnect the keyboard and connect it again.
0211	Keyboard error	Disconnect the keyboard and connect it again. If the error cannot be corrected, contact your service representative.
0213	Keyboard locked - Unlock key switch.	Release the lock of the key switch. If the error cannot be corrected in spite of the release of the lock, contact your service representative.
0220	Monitor type does not match CMOS Run SETUP.	Start the SETUP. If the error cannot be corrected in spite of the start of SETUP, contact your service representative.
0230	System RAM Failed at offset.	Contact your service representative.
0231	Shadow Ram Failed at offset.	
0232	Extended RAM Failed at address line.	
0250	System battery is dead - Replace and run SETUP.	Contact your service representative to replace the battery. (After restarting the computer, start the SETUP to provide the setting again.)
0251	System CMOS checksum bad - Default configuration used.	The default values have just been set. Start the SETUP to provide the setting again. If the error cannot be corrected, contact your service representative.
0252	Password checksum bad - Passwords cleared.	The password has just been cleared. Start the SETUP to provide the setting again.
0260	System timer error.	Start the SETUP to set the date and time again. If the same error occurs successively in spite of the resetting, contact your service representative.
0270	Real time clock error.	
0271	Check date and time setting.	
02B0	Previous boot incomplete - Default configuration used.	Start the SETUP and check the settings.
0281	Memory size found by the POSt differs from EISA CMOS.	Initialise the EISA CMOS.
02D0	System cache error - Cache disabled.	The cache cannot be used. Contact your service representative.
02D1	System Memory exceeds the CPU's caching limit.	Contact your service representative.
02F4	EISA CMOS not writeable.	
02F5	DMA Test Failed.	
02F6	Software NMI Failed.	
02F7	Fail-safe Timer NMI Failed.	

Table 34: POST Error Messages (Continued)

Error code	Error message	Recommended Action
0611	IDE configuration changed	Check IDE configuration.
0612	IDE configuration error - device disabled	
0613	COM A configuration changed	Check COM A configuration.
0614	COM A configuration error - device disabled	
0615	COM B configuration changed	Check COM B configuration.
0616	COM B configuration error - device disabled	
0B22	Processors are installed out of order.	Request the maintenance to replace the CPU.
0B28	Unsupported Processor detected on Processor 1.	Make sure that the server supports the CPU. If you are not sure, contact your service representative to request the maintenance.
0B29	Unsupported Processor detected on Processor 2.	
0B30	FAN1 Alarm occurred.	Contact your service representative to replace the fan.
0B31	FAN2 Alarm occurred.	
0B32	FAN3 Alarm occurred.	
0B33	FAN4 Alarm occurred.	
0B34	FAN5 Alarm occurred.	
0B35	FAN6 Alarm occurred.	
0B36	FAN7 Alarm occurred.	
0B37	FAN8 Alarm occurred.	
0B38	FAN9 Alarm occurred.	
0B39	FAN10 Alarm occurred.	
0B3A	FAN11 Alarm occurred.	
0B3B	FAN12 Alarm occurred.	
0B3C	FAN13 Alarm occurred.	
0B3D	FAN14 Alarm occurred.	
0B3E	FAN15 Alarm occurred.	
0B42	Resource conflict	Contact your service representative.
0B43	Warning: IRQ not configured	
0B45	System Configuration Data Write Error	
0B50	Processor #1 with error taken off-line.	The system is forcibly started because an error was detected in the CPU. Contact your service representative.
0B51	Processor #2 with error taken off-line.	
0B5F	Forced to use processor with error.	
0B60	DIMM group #1 has been disabled	Contact your service representative.
0B61	DIMM group #2 has been disabled	
0B62	DIMM group #3 has been disabled	
0B63	DIMM group #4 has been disabled	
0B64	DIMM group #5 has been disabled	
0B65	DIMM group #6 has been disabled	
0B70	The error occurred during temperature sensor reading.	Contact your service representative.
0B71	System Temperature out of the range.	Contact your service representative to replace the fan.
0B74	The error occurred during voltage sensor reading.	Contact your service representative.
0B75	System voltage out of the range.	

Table 34: POST Error Messages (Continued)

Error code	Error message	Recommended Action
0B80	BMC Memory Test Failed.	Turn off the power once and then on again to start the server. If the error cannot be corrected, contact your service representative.
0B81	BMC Firmware Code Area CRC check failed.	
0B82	BMC Core Hardware failure.	
0B83	BMC 1BF or 0BF check failed.	
0B8B	BMC progress check timeout.	
0B8C	BMC command access failed.	
0B8D	Could not redirect the console - BMC Busy -	
0B8E	Could not redirect the console - BMC Error -	
0B8F	Could not redirect the console - BMC Parameter Error -	
0B90	BMC Platform Information Area corrupted.	
0B91	BMC update firmware corrupted.	
0B8A	BMC SEL area full	Start the SETUP and select [Server] - [Event Log configuration] - [Clear All Error Logs] and press Enter to clear event logs.
0B8F	Could not redirect the console BMC Parameter Error	Turn off the power once and then on again to start the server. If the error cannot be corrected, contact your service representative.
0B92	Internal Use Area of BMC FRU corrupted.	This is not a fatal error. Turn off the power once and then on again to restart the server. If the error cannot be corrected, contact your service representative.
0B93	BMC SDR Repository empty.	Turn off the power once and then on again to restart the server. If the error cannot be corrected, contact your service representative.
0B94	IPMB signal lines do not respond.	This is not a fatal error. Turn off the power once and then on again to restart the server. If the error cannot be corrected, contact your service representative.
0B95	BMC FRU device failure.	
0B96	BMC SDR Repository failure.	Turn off the power once and then on again to start the server. If the error cannot be corrected, contact your service representative.
0B97	BMC SEL device failure.	
0B98	BMC RAM test error.	
0B99	BMC Fatal hardware error.	
0B9A	BMC not responding.	Update the RMC firmware. If the error cannot be corrected, contact your service representative.
0B9B	Private I2C bus not responding.	Turn off the power once and then on again to start the server. If the error cannot be corrected, contact your service representative.
0B9C	BMC internal exception.	
0B9D	BMC A/D timeout error.	
0B9E	SDR repository corrupt.	
0B9F	SEL corrupt.	
0BB0	SMBIOS – SROM data read error.	Contact your service representative.
0BB1	SMBIOS – SROM data checksum bad.	
8100	Memory Error detected in DIMM group #1.	Contact your service representative to replace the DIMM in the relevant group.
8101	Memory Error detected in DIMM group #2.	
8102	Memory Error detected in DIMM group #3.	
8103	Memory Error detected in DIMM group #4.	
8104	Memory Error detected in DIMM group #5.	
8105	Memory Error detected in DIMM group #6.	
8150	NVRAM cleared by jumper.	

Table 34: POST Error Messages (Continued)

Error code	Error message	Recommended Action
8151	Password cleared by jumper.	Start SETUP and provide the settings again.
8160	Mismatch Processor speed detected on Processor 1.	Start SETUP and set a password again.
8161	Mismatch Processor speed detected on Processor 2.	Contact your service representative.
None	Expansion ROM not initialized – PCI Mass Storage Controller in slot n (n: slot number)	Disable initialization of the optional device expansion ROM by using the BIOS SETUP utility (see "BIOS Setup Utility" on page 63).
	H/W Configuration of BMC is corrupted. !! Update BMC F/W Configuration by configuration tool !! !! Refer to BMC configuration manual !!	Use ExpressBuilder to configure the optional remote management card .

Beep Codes

If an error occurs during the POST, the server beeps, indicating the type of error.

Each number indicates the number of short beeps, and a hyphen indicates a pause. For example, the beep interval 1-5-2-1 indicates 1 beep, pause, 5 beeps, pause, 2 beeps, pause, and 1 beeps notifying that a checksum error occurred on ROM.

Table 35: POST Error Beep Codes

Beeps	Error	Recommended Action
1-2	Option ROM initialization error	1. Check if the optional add-in card is properly installed. 2. Run the BIOS setup utility to check the IRQ assignment. 3. Ask your service representative to replace the add-in card or motherboard..
3-3	ROM checksum error	Replace the motherboard.
1-2-2-3		
1-3-1-1	DRAM refresh test error	1. Check if the DIMM is properly installed. 2. Remove the DIMM once, and then re-install it to check if it operates normally. 3. Ask your service representative to replace the failed DIMM or motherboard.
1-3-1-3	Keyboard controller error	1. Check if the keyboard is properly connected. 2. Replace the motherboard
1-3-3-1	No memory or capacity check error	1. Check if the DIMM is properly installed. 2. Remove the DIMM once, and then re-install it to check if it operates normally. 3. Ask your service representative to replace the failed DIMM or motherboard
1-3-4-1	DRAM address error	
1-3-4-3	DRAM test Low Byte error	
1-4-1-1	DRAM test High Byte error	
1-5-1-1	CPU startup error	1. Check if the CPU is properly installed. 2. Remove the CPU once, and then re-install it to check if it operates normally. 3. Ask your service representative to replace the failed CPU.
1-5-2-1	No CPU installed	
1-5-4-2	AC power interrupted	The AC power supply is interrupted due to power failure or momentary voltage drop and the system is restarted. This is not an error.
1-5-4-4	Abnormal voltage	Replace the motherboard.
2-1-2-3	BIOS ROM copyright test error	
2-2-3-1	Unexpected interrupt test error	

Status Indicators

This section explains the indication and meanings of the server lamps.

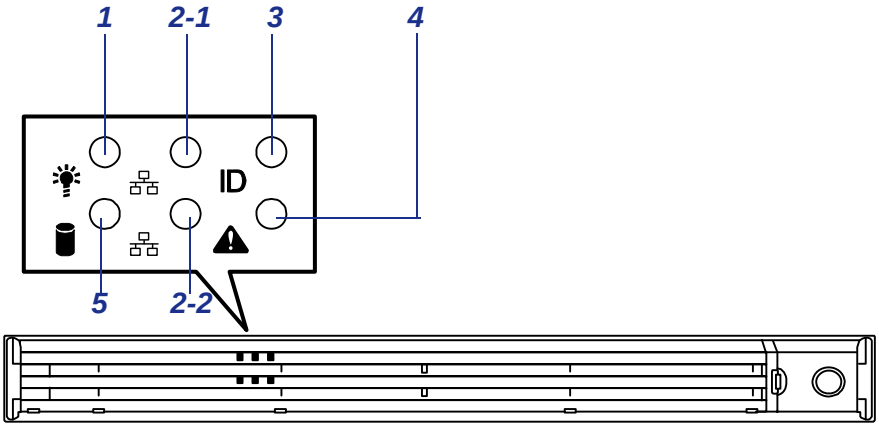

Figure 151: Front Lamps

1	Power lamp (green)
2	ACT lamp (green)
3	UID lamp (blue)
4	Status lamp (green/amber)
5	Disk access lamp (green/amber)

POWER Lamp

The POWER lamp is on (green) while the server power switch is on. It is off while no power is supplied to the server.

The POWER lamp indicates that the server is running in the power-saving mode (sleep mode). If the OS supports the power-saving mode such as Windows Server 2003, running the command blinks the POWER lamp in green and place the server in the power-saving mode. Press the POWER switch to turn out the POWER lamp and place the server back in the normal mode.

The power-saving mode is only available when the OS supports the power-saving feature. Some OS's allow you to set the server to automatically turn in the power-saving mode when no access is made to the server for a certain period of time or to select the power-saving mode with a command.

Status Lamp

The STATUS lamp is on (green) while the server is operating normally. (The rear panel also has the STATUS lamp on it.) If the STATUS lamp is off or turns amber and flashes, it indicates that the server is in abnormal state.

The table below explains the STATUS lamp indication, the meanings, and the procedures.

Notes:

- *If NEC ESMPRO is installed, you can confirm the cause of a failure by referring to the error log.*
- *If shutdown processing can be performed through the operating system when you want to restart the system after turning the power off, restart the system by performing shutdown processing. If shutdown processing cannot be performed, restart the system by resetting, forcibly turning the power off, or disconnecting and then connecting the power cord.*

Table 36: Status Lamp Indications

Status lamp indication	Description	Procedure
On (green)	The server is operating normally.	–
Flashing (green)	The server is operating with the memory, CPU, or power supply unit in degraded state. An uncorrectable memory error has often occurred.	Check the AC power lamp indication on the rear panel of the server. Identify the device in degraded state by using the BIOS setup utility "SETUP," and replace it as soon as possible.
Off*	The power is off.	–
	POST is in progress.	Wait for a while. The status lamp turns green when POST is completed.
	A CPU error occurred.	Turn the power off and then turn it on. If the POST screen displays an error message, take notes of the message, and contact your sales representative.
	A CPU temperature alarm was detected.	
	A timeout occurred when the time set for the watchdog timer arrived.	
	A CPU bus error occurred.	
	A memory dump request is made.	Wait until the memory dump is completed.
On (amber)*	A temperature alarm was detected.	Check if the internal fans are clean and if the fan units are firmly connected. If the status lamp indication does not change when the fans are normal, contact your sales representative.
	A voltage alarm was detected.	Contact your sales representative.
	All the power supply units failed.	

Table 36: Status Lamp Indications (Continued)

Flashing (amber)*	One of the following problems was detected in the redundant power configuration: - AC power is not supplied to one of the two power units - Failure of one of the two power units.	Connect the power cord to supply power. If the power supply unit is faulty, contact your service representative;
	A fan alarm was detected.	Check if the fan units are firmly connected. If the status lamp indication does not change when the fans are normal, contact your sales representative.
	A temperature warning was detected.	Check if the internal fans are clean and if the fan units are firmly connected. If the status lamp indication does not change when the fans are normal, contact your sales representative.
	A voltage warning was detected	Contact your service representative.
	An error was detected on one of the hard disk drives.	

Disk Access Lamp

The DISK ACCESS lamp indicates the status of the hard disk mounted in the 3.5-inch disk bay.

The lamp turns green each time access is made to the hard disk.

When the DISK ACCESS lamp turns amber, it indicates that a hard disk failure has occurred. Check the hard disk lamp for the status of the failing hard disk.

ACT Lamp

The ACT lamp is green while the server is connected to the LAN. The lamp flashes while the server is accessed via the LAN (during transmission/reception of packets). The number next to the icon indicates the network port number on the rear panel of the server.

UID Lamp (UID)

Pressing the UID switch toggles the front panel UID lamp (blue) and the motherboard UID lamp on and off. The motherboard UID lamp is visible through the rear of the chassis and allows you to locate the server you're working on from the rear of the servers on a rack.

Refer to *"Identification of Servers ~ UID Switch ~" on page 26* for more information on the UID switch.

Disk Access Lamp

The disk access lamp of the optical device drive is on while the drive is accessed.

Hard Disk Lamp

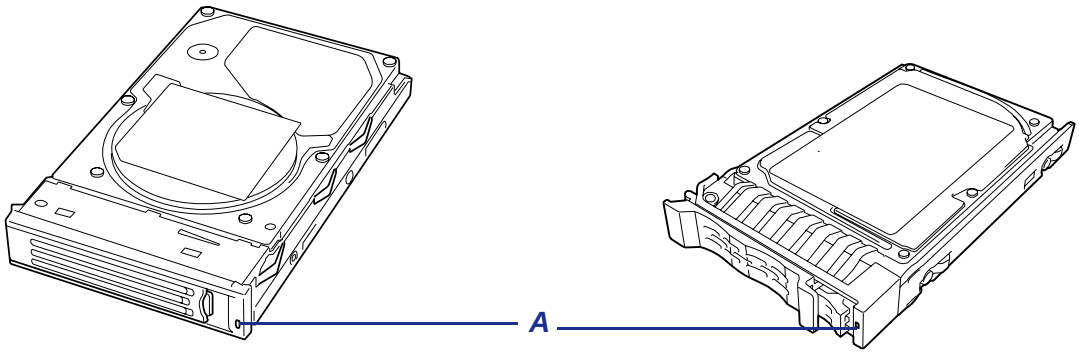

Figure 152: Hard Disk Lamp

The disk lamp (A) located on the drive carrier indicates the following depending on the status:

- Flashing (green)

  The lamp indicates that the hard disk is accessed.

- On (amber)

The lamp indicates a failure of a hard disk mounted in a RAID configuration.

> ***Note**: Even if one (two in RAID6) of the hard disks fails in the logical drive (RAID1, RAID6 or RAID6), the server can continue operation. However, replace the hard disk drive as soon as possible, and perform a reconstruction (rebuild) processing. (The failing hard disk drive can be hot-swapped.)*

- Flashing switching back and forth between green and amber

  The lamp indicates that reconstruction (rebuild) processing is being performed for the hard disk. (This flashing does not indicate a failure.) When a failing hard disk is replaced in a RAID system, the system rebuilds the data. (Auto-rebuild function) The lamp switches back and forth between green and amber during rebuild processing.

  The lamp goes off when the rebuild processing finishes.
  It turns amber when the rebuild processing fails.

⚠ Caution

If the server is turned off during rebuild processing, the processing is stopped. Restart the server, mount the new hard disk in hot swap mode, and then perform rebuild processing again. Observe the following notes on using the auto-rebuild function.

- Do not turn the power off. (Once the power is turned off, the auto-build function does not start.)
- Let 90 seconds or more pass between when dismounting a failing hard disk and when mounting the new one.
- Do not replace a failing hard disk while rebuild processing is being performed for another hard disk.

LAN Connector Lamps

There are two lamps for each of the two LAN ports (connectors) on the rear panel.

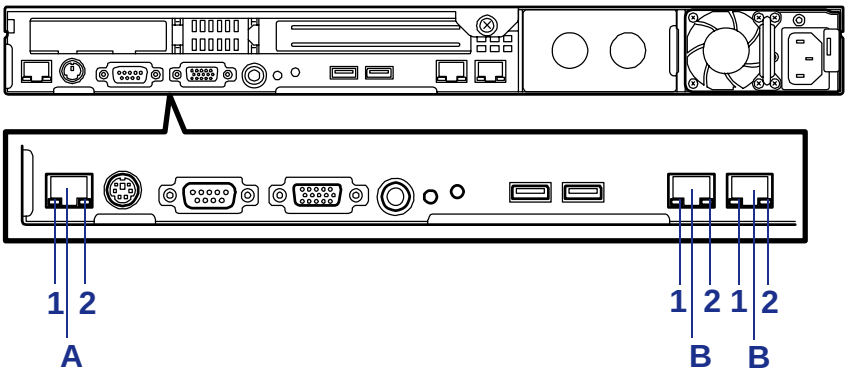

Figure 153: LAN Connector Lamps

A: Management Port
B: LAN Port
1: LINK/ACT LED
2: Speed LED

- LINK/ACT lamps
  Each LINK/ACT lamp indicates the status of the standard network port of the server. While power is supplied to the server and HUB and the connection is correct, the lamp is on (green).
  The lamp turns green and flashes while the network port is transmitting/receiving data.
  If the lamp does not go on when the LINK state is placed, check if the network cable is in normal state and if it is connected correctly. If the lamp does not go on yet when the network cable is normal, the network (LAN) controller may be faulty. In this case, contact your sales representative.

- Speed lamp (for data transmission ports)
  This lamp indicates whether each of the network ports normally equipped with the server is operated through the 1000BASE-T, 100BASE-TX or 10BASE-T network interface.
  If the lamp is lit orange, the network port is operated through 1000BASE-T. If the lamp is lit green, the network port is operated through 100BASE-TX.
  If the lamp is off, the network port is operated through 10BASE-T.

- Speed lamp (for management port)
  This LED indicates chether each of the network ports normally equipped with the server is operated through the 100BASE-TX or 10BASE-T network interface. If the LED is lit amber, the network port is operated through 100BASE-TX. If the LED is off, the network port is operated through 10BASE-T.

AC Power LED (Redundant Power Supply Only)

There is an AC POWER LED for the power supply unit on the rear. The LED turns green and flashes when the power supply unit receives AC power from the power cord, which is connected to the AC inlet. (Flashing amber indicates no AC power is received in any one of two power supplies in the redundant configuration.)

The LED turns green when the server power switch is turned on. If the LED does not go on when the server power switch is turned on or if it turns amber, the power supply unit is probably faulty. In this case, contact your service representative to replace the power supply unit.

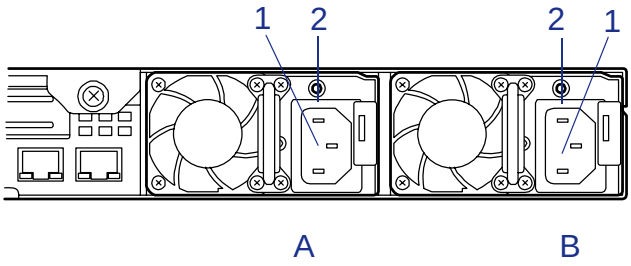

Figure 154: AC Power LED

A: Power supply slot (option)
B: Power supply slot (standard)
1: AC inlet
2: AC Power LED

***Note**: If one power supply unit fails while an optional power supply is mounted, the system can continue operation with the other power supply unit (redundant function). The failing power supply unit can be hot-swapped, that is, replaced without shutting down the system.*

Appendix 1: Specifications

Table 37: Bull NovaScale R440 E1 Specifications

Cabinet design		Rack-mount type (1U)		
Models		2,5" Redundant Power Supply	3,5" Redundant Power Supply	3,5" fix Power Supply
CPU	Type	Quad-core Intel® Xeon™ Processor		
	Number of processors	1 (max: 2)		
	L2 cache	2 x 6 MB		
Chipset		Intel 5000P (1333 MHz)		
Memory	Minimum	2 GB (1 GB x 2)		
	Maximum	48 GB (4 GB x 12) The standard DIMM must be replaced.)		
	Memory module	DDR2-667 FB-DIMM, with x4/x8 SDDC feature		
	Error check	ECC		
Hard Disk Drive		SAS (Serial Attached SCSI): 879 GB (146,5 GB x 6) maximum	SATA2 (Serial ATA 2): 2250 GB (750 GB x 3) maximum SAS (Serial Attached SCSI): 900 GB (300 GB x 3) maximum, with optional RAID controller installed.	
Hard Disk Bay	Slots	6 (2,5-inch)	3 (3,5-inch)	
	RAID controller	SAS (Serial Attached SCSI)	SATA (Serial ATA)	
	RAIS system	RAID0/1 (standard) RAID5-6 (option)	RAID0/1 (standard)	
	Hot-swap	Supported		
Optical Device Drive		Standard: CD-RW/DVD-ROM drive x1		
Floppy Disk Drive		Required option: 3.5-inch USB floppy disk drive (2-mode) x1		
Graphics (VRAM)	Graphics accelerator	Embedded on motherboard		
	Video VRAM	8 MB		
	Graphics display	640x480, 800x600, 1024x768, 1280x1024		
	Number of colors	16 million colors max		
Additional Slots	3.5-inch floppy disk drive bay	1		
	PCI EXPRESS (x8)	1 slot (low profile)		
	PCI EXPRESS (x8)	1 slot (full-height)		
		RAID controller is factory installed.		

Table 37: Bull NovaScale R440 E1 Specifications (Continued)

Interface	Keyboard/ Mouse	MINI DIN 6-pin connector (1 port)	
	USB	4-pin (Front: 2 ports; Rear: 2 ports)	
	Serial	DB9 compatible (2 ports) RS-232C compliant	
	Video	MINI D-Sub 15-pin (1 port)	
LAN interface		1000Base-T/ 100Base-TX/ 10Base-T (2 ports) 100Base-TX /10Base-T (1 management port)	
Power supply		100 to 120 VAC ±10%, 200 to 240 VAC ±10%, 50/ 60 Hz ±1 Hz	
Redundant Power Supply		Supported (option)	None
Redundant Fans		Supported (standard)	None
Weight (Max)		16 kg (max 20 kg)	16 kg (max 21 kg)
External dimensions		425 (width) × 718* (depth) × 43 (height) mm (front bezel excluded)	
Environmental requirements	Temperature	10 to 35°C (operating), -10 to 55°C (non-operating, storage)	
	Humidity	20 to 80% RH (no condensation)	

* Excluding the front bezel.

Appendix 2: Interrupt Requests

Table 38: Interrupt Requests

IRQ	Peripheral Device (Controller)	IRQ	Peripheral Device (Controller)
0	System timer	12	Mouse
1	Keyboard	13	Numeric processor
2	-	14	Primary IDE
3	COM2 serial port (PCI)	15	Secondary IDE
4	COM 1 serial port (PCI)	16	USB
5	PCI	17	VGA
6	Floppy disk drive	18	-
7	PCI	19	USB
8	Real-time clock	30	LAN1
9	ACPI compliant system	31	LAN2

Appendix 3: Maintenance

This chapter describes the daily maintenance of the server and precautions when relocating or storing the server.

Making Backup Copies

We recommend you make backup copies of your valuable data stored in hard disks of the server on a regular basis. For backup storage devices suitable for the server and backup tools, consult with your sales agent.

When you have changed the hardware configuration or BIOS configuration, select "System Information Management" and then "Save" of the Off-line Maintenance Utility to make a backup copy of the system information.

Also make a backup copy of the RAID system configuration data if your system is in the RAID system configuration. When your hard disks have been auto-rebuilt due to a failure, it is recommended to make a backup copy of the configuration data. To make a backup copy of the configuration data, use the configuration utility that is resident in the FLASH memory on the optional RAID system controller board. Refer to the manual supplied with the board.

Cleaning

Clean the server on a regular basis to keep the server in a good shape.

Warning

- Do not disassemble, repair, or alter the server
- Do not look into the optical device drive
- Do not remove the lithium battery
- Disconnect the power plug before working with the server

Caution

- Avoid installation in extreme temperature conditions
- Make sure to complete board installation
- Protect the unused connectors with the protective cap

Cleaning the External Surfaces of the Server

⚠ Caution

- To avoid altering the material and color of the server, do not use volatile solvents such as thinner and benzene to clean the server.
- The power receptacle, the cables, the connectors on the rear panel of server, and the inside of the server must be kept dry. Do not moisten them with water.

For daily cleaning, wipe the external surfaces of the server with a dry soft cloth

If stains remain on the surfaces:

1. Make sure that the server is off-powered (the POWER/SLEEP lamp goes off).
2. Unplug the power cord of the server from a power outlet.
3. Wipe off dust from the power cord plug with a dry cloth.
4. Soak a soft cloth in neutral detergent that is diluted with cold or lukewarm water, and squeeze it firmly.
5. Rub off stains on the server with the cloth prepared in Step 4.
6. Soak a soft cloth in water, squeeze it firmly, wipe the server with it once again.
7. Wipe the server with a dry cloth.
8. Wipe off dust from the fan exhaust opening on the rear of the server with a dry cloth.

Cleaning the Interior of the Server

One important item in a good maintenance program is regular and thorough cleaning of the interior of the server, especially around the motherboard.

Dust buildup inside the server can lead to several problems. As dust acts as a thermal insulator, a buildup can prevent proper system cooling. Excessive heat will shorten the life of server components. Also, dust may contain conductive or corrosive materials that can cause short circuits or corrosion of electrical contacts.

How often you should clean the interior of the server depends on the environment in which it is located. For most office environments, you probably should clean the server every 12 months. For more severe environments, clean the interior every 6 months.

To clean the interior of the server, you will need a small vacuum cleaner (with plastic tipped nozzle and electrostatic protection), a computer grade canned air, and a small brush.

Warning

Unplug all power cords before performing any maintenance. Voltage is present inside the server and display unit even after the power is turned off. All voltage is removed only when the power cord is unplugged.

Caution

Do not use the brush made of chemical fabric, or the cleaning material that will generate an electrostatics.

To clean the interior of the server:

1. Turn off the server and unplug all power cables.
2. Remove the logic cover and the drive cover.
3. Use a small brush to loosen any dust and debris on the motherboard.
4. Use computer grade canned air to blow dust off components on the motherboard.
5. Use a small vacuum cleaner with plastic tip to vacuum out dust and debris from the interior of the server.
6. Reinstall the logic cover and the drive cover.
7. Reconnect all power cables and turn on the server.

Cleaning the Keyboard

1. Power off the server and peripheral devices.
   The POWER/SLEEP lamp is off.
2. Wipe the keyboard surface with a dry cloth.

Cleaning the Mouse

The mouse operation depends on the degree of smoothness of the internal ball rotation. To keep the mouse ball clean, use the mouse in a place with little dust.

To clean the mouse:

1. Prepare cold or lukewarm water, neutral detergent, alcohol, two dry soft clothes, and cotton swabs.
2. Power off the server.
   The POWER/SLEEP lamp goes off.
3. Turn the mouse upside down, and rotate the mouse ball cover counterclockwise to remove it.
4. Take out the ball from the mouse. Cover the bottom of the mouse with your hand, and turn your hand holding the mouse (the mouse is on your palm with the button upward). The mouse ball is released onto your palm.
5. Soak a soft cloth in neutral detergent that is diluted with cold or lukewarm water, and squeeze it firmly.
6. Rub off stains on the mouse ball. Softly wipe the mouse ball with the cloth prepared in Step 5.
7. Wipe the mouse ball with a dry soft cloth.
8. Wipe three small rollers inside the mouse with a cotton swab soaked with alcohol. Wipe stains slowly and carefully by rotating rollers with the tip of the cotton swab.
9. Blow out any dust from the mouse. Protect your eyes from the dust.
10. Put the mouse ball back into the mouse.
11. Place the mouse ball cover, and rotate it clockwise until it is locked.

Cleaning an Optical Drive and Optical Disc

A dust-accumulated tray or a dusty optical drive may cause the device not to read data correctly.

To Clean an Optical Drive:

1. Power the server.
   The POWER/SLEEP lamp is lit.
2. Press the optical drive tray Open/Close button on the front of the optical drive.
   The tray os openning.
3. Hold the disc and take it out from the tray.

***Note**: Do not touch the signal side of the disc with your fingers.*

4. Wipe the tray with a dry soft cloth.

Caution

Do not wipe the lens of the optical drive. Doing so may damage the lens and may cause a malfunction of the drive.

5. Push on the tray front to close the tray.

To Clean an Optical Disc:

Wipe the signal side of the disc with a dry soft cloth.

Caution

- Wipe disks from the center to the outside.
- Use only a specific cleaner if necessary. Cleaning an optical disc with record spray/cleaner, benzene, or thinner causes damage to the disk contents. At worst, inserting the disc into the server may cause a failure.

System Diagnostics

The System Diagnostics runs several tests on the server.

Select [Maintenance Tools] - [Test and diagnostics] in the ExpressBuilder to diagnose the system.

Test Items

The following items are tested in system diagnostics.

- Memory
- CPU cache memory
- Hard disk used as a system

Caution

When executing the System Diagnostics, make sure to remove the LAN cable.

Executing the System Diagnostics with the LAN cable connected, the network may be influenced.

***Note**: On checking the hard disk, no data is written into the disk.*

Starting and Ending the System Diagnostics

There are two ways to diagnose the server: to use the local console (keyboard) of the server itself, and to use the management PC via serial port (remote console).

⚠ Caution

Use the serial port to execute System Diagnostics with remote console. The LAN connection is not for System Diagnostics.

Procedures to start the diagnostics program is as follows:

1. Shutdown the OS, and turn off the server. Then, unplug the power cord.
2. Disconnect all the LAN cables from the server.
3. Plug the power cord and turn on the server.
4. Reboot the server with the ExpressBuilder DVD.
   - Select [Maintenance Tools (Normal mode)] when using the local console of the server.
   - Select [Maintenance Tools (Redirection mode)] when using a remote console.
5. Select [English].
6. Select [Tests and Diagnostics].
7. Select [End-User Mode] and the system diagnostics starts.

   The diagnostics will be completed in approximately three minutes. At that time, the screen of the display changes. Diagnosis tool title: shows a name of this diagnosis and Version information.
   - Test windows title: shows the progress of diagnosis. When it completes, it shows "Test End".
   - Test Result: shows the information including time of start, end and progress, and result of the diagnosis.
   - Guide line: shows a description of keys to navigate the window.
   - Test window: Move the cursor and press **Enter** to view the detail of the diagnosis.

If an error is detected during the System Diagnostics, the test result shows "Abnormal End" in red color. Move the cursor and press **Enter** on the diagnosis which error occurred. Take a note of the error message showed, and contact your sales agent.

8. Follow the Guide line shown in the bottom of the screen and press **Esc** to show the End user Menu.
   - <Test Result> shows the screen of the diagnosis completed aforementioned.
   - <Device List> shows the information of all the devices connected.
   - <Log Info> shows the log information and error messages of the diagnosis. it can be saved to a floppy disk. To save the log information to a floppy disk, insert a formatted floppy disk to a floppy disk drive and select <Save [F]>.
   - <Option> gives access to the different option menus.
   - <Reboot> restarts the server.
9. Select <Reboot> in the Enduser Menu above.
   The Express Server restarts and ExpressBuilder boot the system.
10. Exit ExpressBuilder, and remove the DVD-ROM from the optical device drive.
11. Turn off the server and unplug the power cord from the receptacle.
12. Reconnect all the LAN cables to the server.
13. Plug the power cord.

This completes the System Diagnostics.

Appendix 4: Installing the Operating System with Express Setup

This section provides information on the use of Express Setup to install and configure the following operating systems on the server.

- Microsoft® Windows® Server 2003 Standard Edition / Microsoft® Windows® Server 2003 Enterprise Edition
- Microsoft® Windows® Server 2003 R2 Standard Edition / Microsoft® Windows® Server2003 R2 Enterprise Edition

To use the server with the other operating systems described in this section, contact your service representative.

⚠ Caution

Before installing the operating system, adjust the system date and time by using the BIOS SETUP utility.

About Express Setup

"Express Setup" helps you install the Windows Operating System. The setup automatically configures the RAID system and installs the Operating System and some management software.

Caution

Executing the Express Setup erases all data on the hard disk drive.

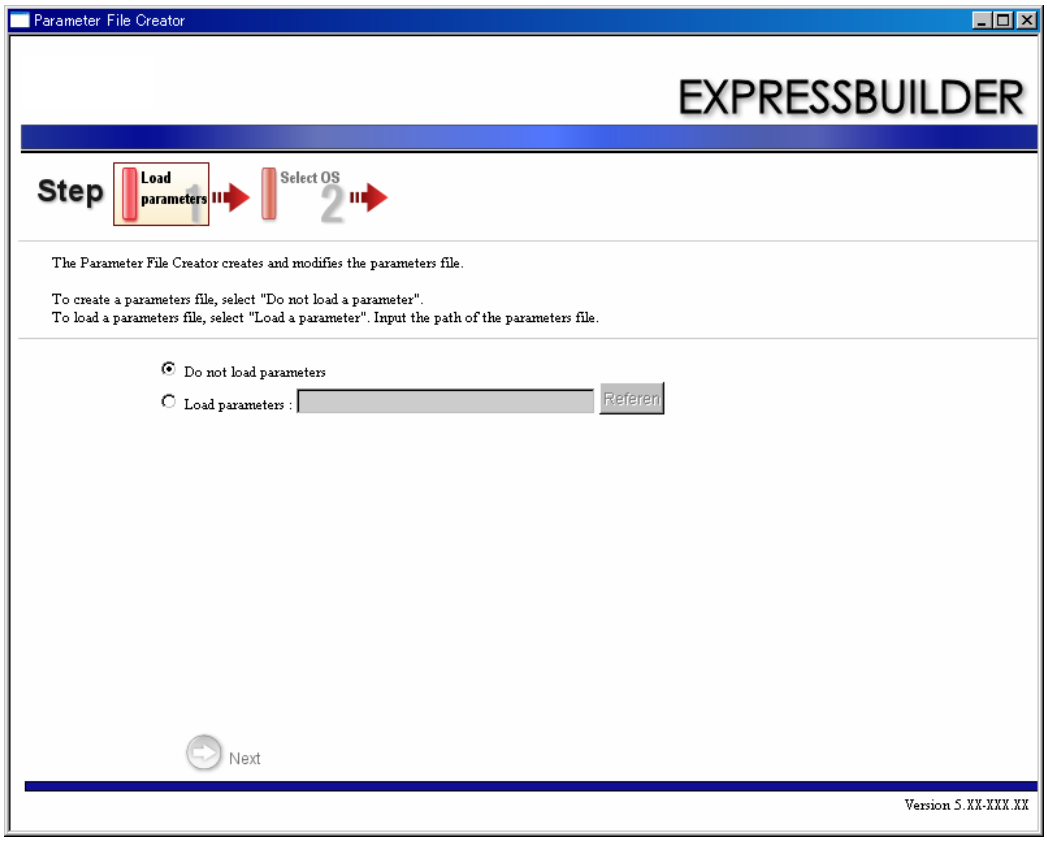

You can also use the "Parameters File" during "Express Setup" in order to save or backup the installation parameters.

If you want to set up the server using parameters defined previously, execute the Express Setup using an existing parameters file.

***Notes**:*

- *If you want to create a parameters file, have a blank floppy disk (MS-DOS 1.44MB format) ready.*
- *When using a floppy disk, a USB floppy disk drive is required.*

- *If you want to use the drivers located on the "OEM-Disk for Mass Storage Device" that ships with optional boards, a parameters file is mandatory.*
- *You can create a parameters file in advance using the "Parameter File Creator" included in the* ExpressBuilder.

Microsoft Windows Server 2003

This section explains how to install Microsoft® Windows® Server 2003 by using the Express Setup.

Caution

Be sure to prepare the Windows Server 2003 CD-ROM that includes Service Pack 1.

***Notes**:*

- *Express Setup does not support the installation of Windows Server x64 Editions. If you want to install it, see* *"Appendix 6: Installing Microsoft Windows Server 2003 x64 Editions without Express Setup" on page 317*.
- *If you install Windows Server 2003 without using Express Setup, see* *"Appendix 5: Installing Microsoft Windows Server 2003 without Express Setup" on page 296*.

Notes on the Windows Installation

Check the following before starting the Express Setup.

About the Windows family

This computer supports the following Windows editions:

- Microsoft® Windows® Server 2003 Standard Edition / Microsoft® Windows® Server 2003 Enterprise Edition (hereinafter, referred to as "Windows Server 2003")
- Microsoft® Windows® Server 2003 R2 Standard Edition / Microsoft® Windows® Server 2003 R2 Enterprise Edition (hereinafter, referred to as "Windows Server 2003")

Express Setup does not support the installation of Windows Server 2003 x64 Editions.

To install other OS, contact your sales maintenance representative.

BIOS Settings

Confirm the BIOS settings before installing Windows Server 2003.

Service Packs supported by the ExpressBuilder

The ExpressBuilder DVD attached to the server supports following combination of the OS installation media and Service Pack.

- Windows Server 2003 R2 x64 Edition
  - OS installation media (with Service Pack 2)
  - OS installation media (No Service Pack) + Service Pack 2
  - OS installation media (No Service Pack)
- Windows Server 2003 R2
  - OS installation media (with Service Pack 2)
  - OS installation media (No Service Pack) + Service Pack 2
  - OS installation media (No Service Pack)
- Windows Server 2003
  - OS installation media (with Service Pack 1)
  - OS installation media (with Service Pack 1) + Service Pack 2

About the Hardware Components

When you install Windows Server 2003, Express Setup requires several preparations if this computer uses the following hardware components.

Installing on the Mirrored Volume

If you want to install Windows Server 2003 on the volume that is mirrored using "Disk Management", invalidate the mirroring before the installation, and validate the mirroring again after the installation.

You can create, invalidate or delete the mirror volume by using "Disk Management" in "Computer Management".

Mounting MO Device

Do not mount an MO device on this computer during the Windows installation.

About Removable Media

Do not set any removable media, such as a DAT, into the device mounted on this computer during the Windows installation.

Connecting Hard Disk Drive

Do not connect other hard disk drives than the drive on which you want to create the Windows system drive.

Notes: *If you connect the LSILogic MegaRAID SAS 8480E RAID controller as a data disk, clear the RAID Controller's configuration information before you perform the Express Setup.*

Re-installing to the hard disk drive which has been upgraded to Dynamic Disk

You cannot re-install Windows Server 2003 if the current partition of the hard disk drive upgraded to Dynamic Disk remains. If you want to keep the current partition, see *"Appendix 5: Installing Microsoft Windows Server 2003 without Express Setup" on page 296* or *"Appendix 6: Installing Microsoft Windows Server 2003 x64 Editions without Express Setup" on page 317*.

About the System Partition Size

The system partition size can be calculated using the following formula.

Size necessary to install the system+ Paging File Size + Dump File Size + Application Size

Size necessary to install the system
= 3500MB (Windows Server 2003 R2)

= 3500MB (Windows Server 2003 with Service Pack1)

= 3500MB (Windows Server 2003 R2 with Service Pack2)

= 5300MB (Windows Server 2003 R2 + ServicePack 2 CD-ROM)

Paging File Size (Recommended)= Mounted Memory Size * 1.5

Dump File Size= Mounted Memory Size + 12MB

Application Size= Required Size

Caution

- The above-mentioned paging file size is recommended for collecting debug information (memory dump). A paging file with an initial size large enough to store the dump file in the boot drive is required.
  The correct debug information might not be able to be collected due to a virtual memory shortage if the paging file is insufficient, so set a size large enough for the entire system.
- The maximum paging file size which can be set on one partition is 4095MB. If the above paging file size exceeds 4095MB, specify 4095MB for the paging file size.
- The maximum dump file size for the system with more than 2GB memory mounted is '2048MB + 12MB'.

- If you wish to install any application program or the like, add the necessary space to the partition to install these programs.

For example, if the installed memory size is 512 MB, the minimum required partition size is:

2900 MB + (512 MB * 1.5) + (512 MB + 12 MB) = 4192 MB.

Divide the partition of the recommended size onto multiple disks as written below if it cannot be reserved in one disk.

1. Set the "Size required for installation + Paging file size".
2. Set the debugging information (equivalent to the dump file size) to be written to a separate disk.

   (If the disk does not have enough free space, then after installing the system using the "Size required for installation + Paging file size," install an additional new disk.)

Installing the Service Pack

When installing Windows Server 2003 R2, it is not necessary to install the Service Pack 1.

Installing Windows Server 2003

Express Setup proceeds with the setup by selecting or inputting several parameters on the wizard. You can also save the parameters to a floppy disk as a parameters file.

1. Turn the power of peripheral device on, and then turn on the server.
2. Insert the ExpressBuilder DVD into the Optical Disc drive of the server.
3. Press the RESET switch or press **Ctrl**, **Alt**, and **Delete** to reboot from the ExpressBuilder. (You may also turn off and then on again to reboot the server.)

   The system will boot from the DVD-ROM and the ExpressBuilder starts.

   Select "OS installation *** default ***" from the boot selection menu. (If you do not hit any key, "OS installation" is selected automatically.)

   The Top menu appears.

4. Select [Perform the Express setup] from the Top Menu, and click [Next].

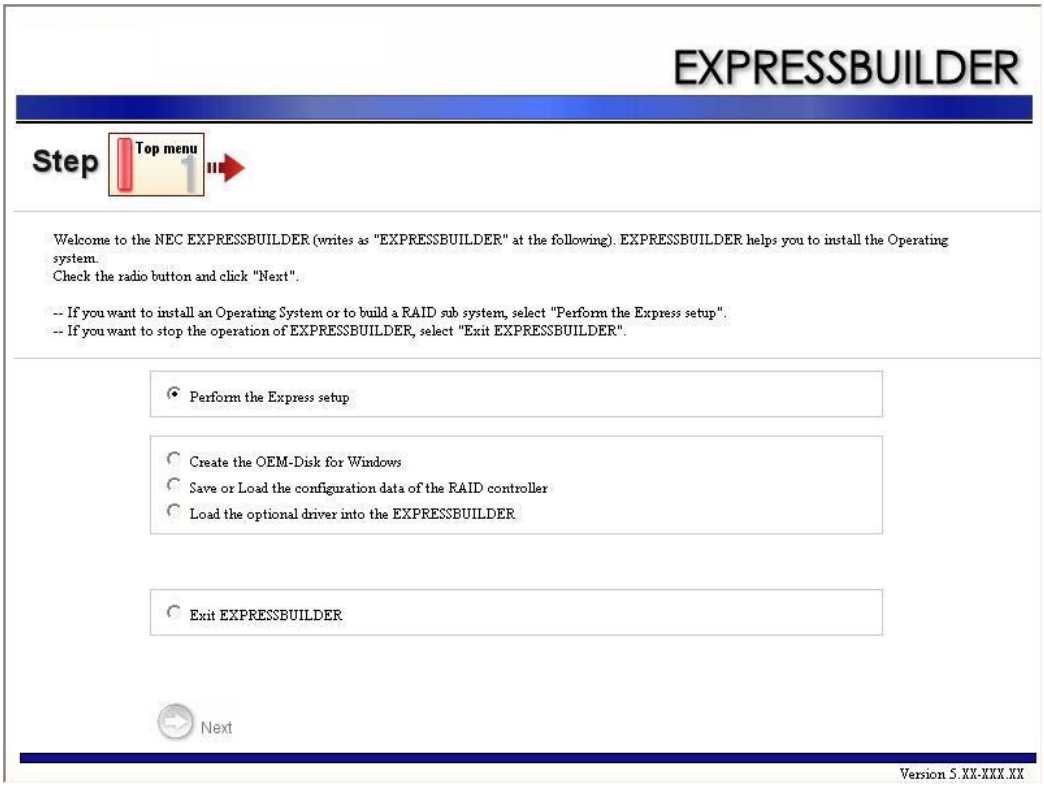

5. The [Load parameters] step is displayed.

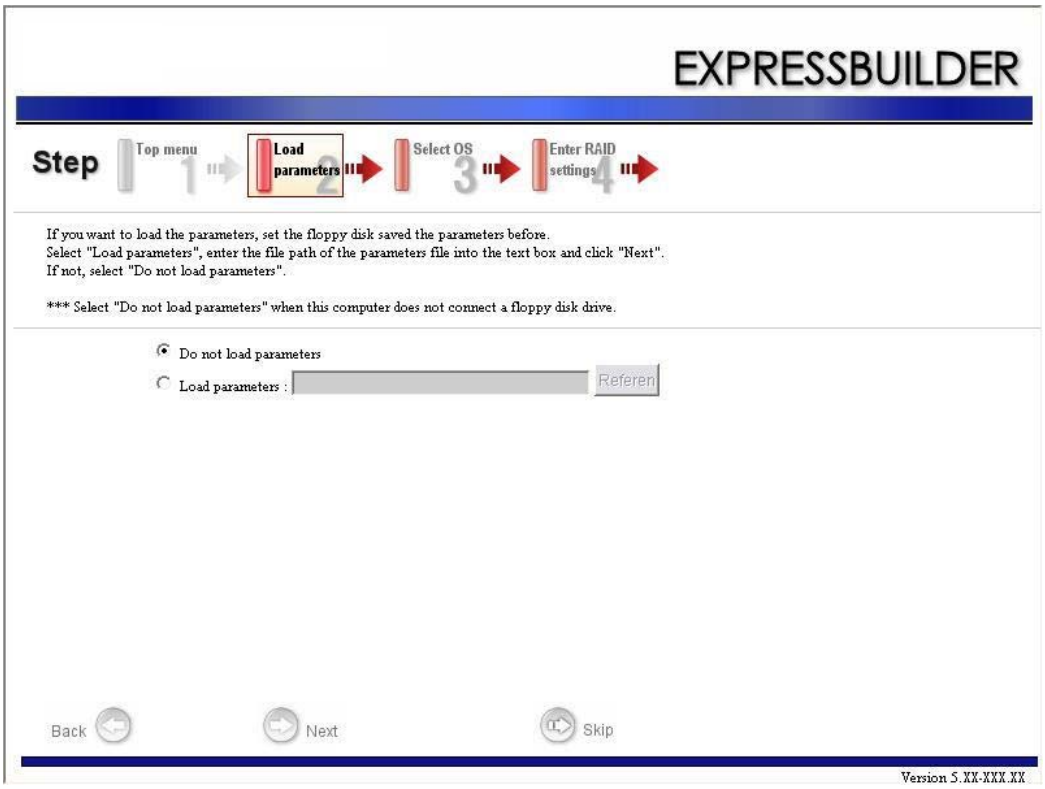

[Do not load parameters]

a. Select [Do not load parameters].

b. Click [Next].

***Notes**: If no floppy disk drive is connected, select this item.*

[Load parameters]

a. Insert the floppy disk containing the parameters file.

b. Select [Load parameters], and enter the file path of the parameters file into the text box.

c. Click [Next].

6. Select the installing Operating System.
Select [Install the Windows (32bit editions)] from the menu, and click [Next].

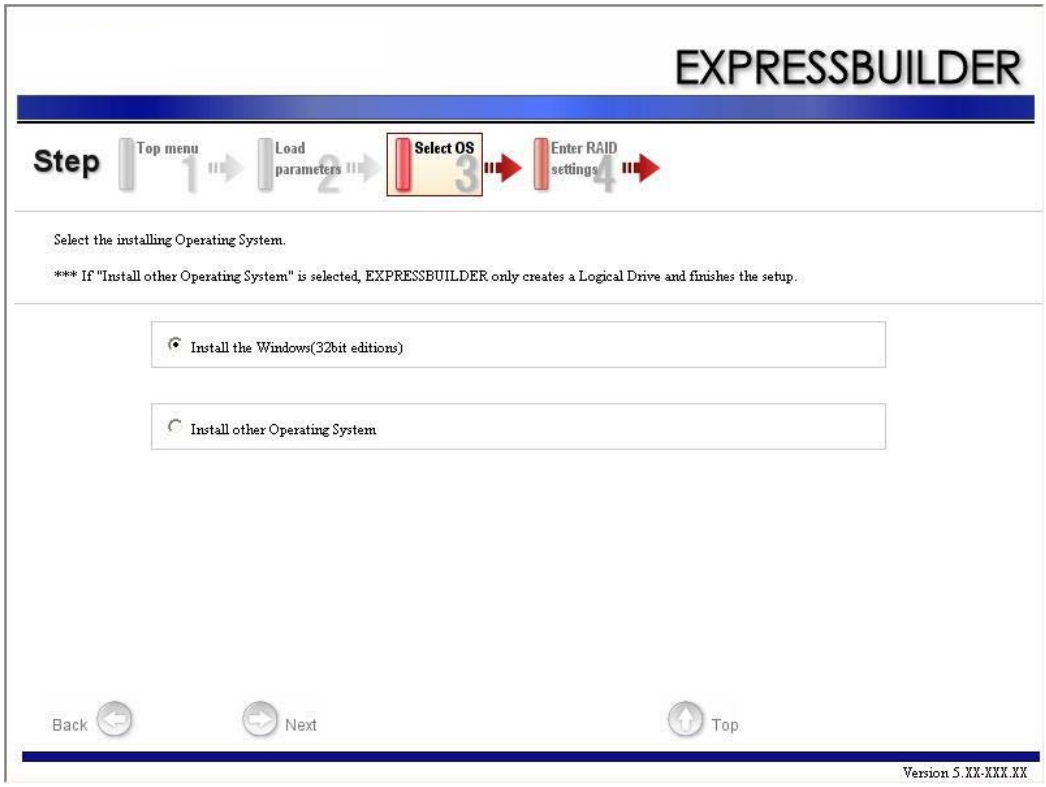

7. Enter the virtual disk settings.

   The [Enter RAID settings] step is displayed. Confirm the parameters, modify if necessary, and then click [Next].

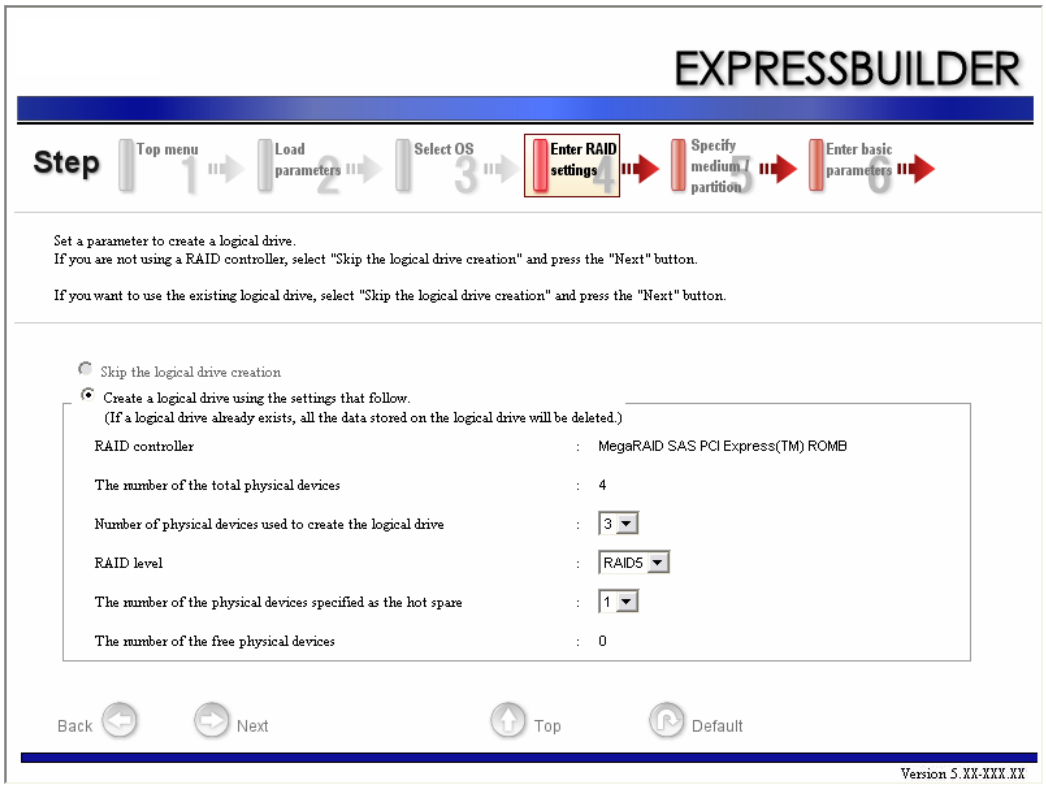

> ***Notes**: You can use only physical devices that have an identical model number to configure a logical drive.*

8. Specify the installation medium and the Windows system partition.

The [Setting medium / Partitions] step is displayed. Confirm the parameters, modify if necessary, and click [Next].

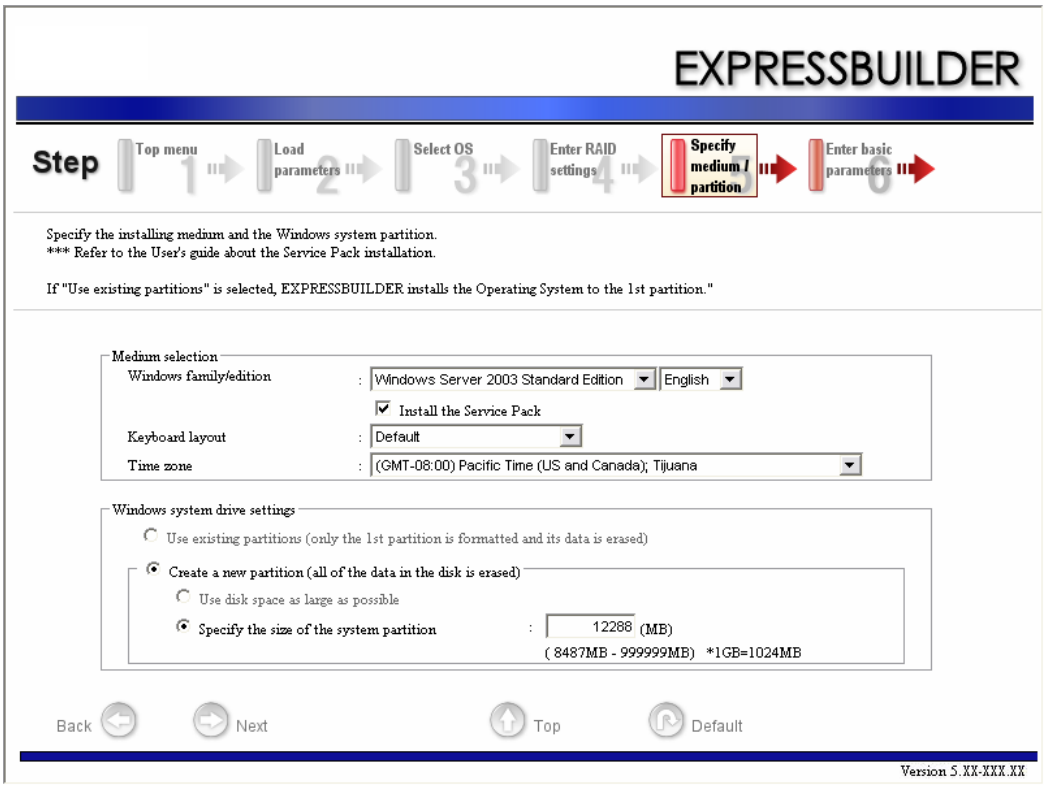

⚠ Caution

About the partition size

- Specify a partition size larger than the required minimum size for the OS installation.
- Do not specify partition size larger than the capacity of the connected hard disk drive.
  - If you select "Create a new partition" at "Windows system drive settings", the contents of the hard disk will be all deleted.
  - If "Use existing partitions" is selected, ExpressBuilder installs the Operating System to the 1st partition (the 1st partition contents are deleted). The data in the other partition is kept if the system has two or more partitions. (See the figure below.)

First partition deleted	Second partition retained	Third partition retained

- You can not re-install the system with an existing partition that is upgraded to Dynamic Disk. Do not select "Use existing partitions" at "Windows system drive settings".

9. Enter the user information, time zone and client license mode.

The [Enter basic parameters] step is displayed. Confirm the parameters, modify if necessary, and click [Next].

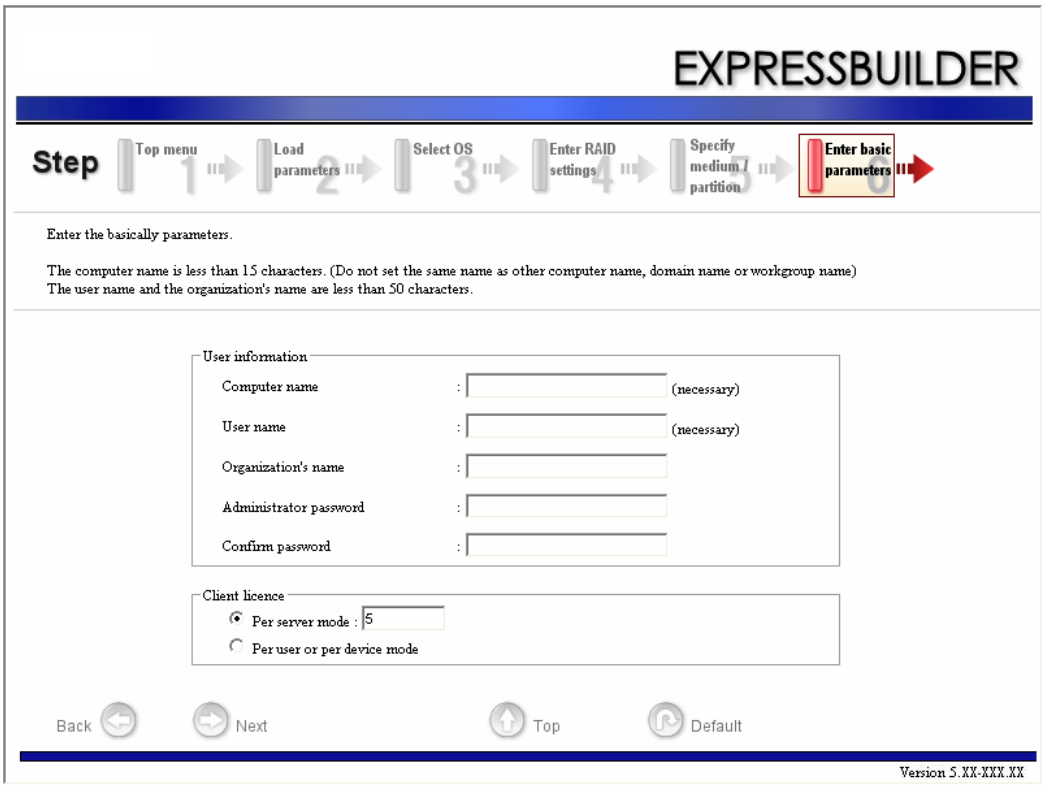

***Notes**: Even if you do not input a value into "Administrator password", "Confirm password", "??????" is displayed.*

10. Enter the network protocol settings.

The [Enter Network Protocol] step is displayed. Confirm the parameters, modify if necessary, and click [Next].

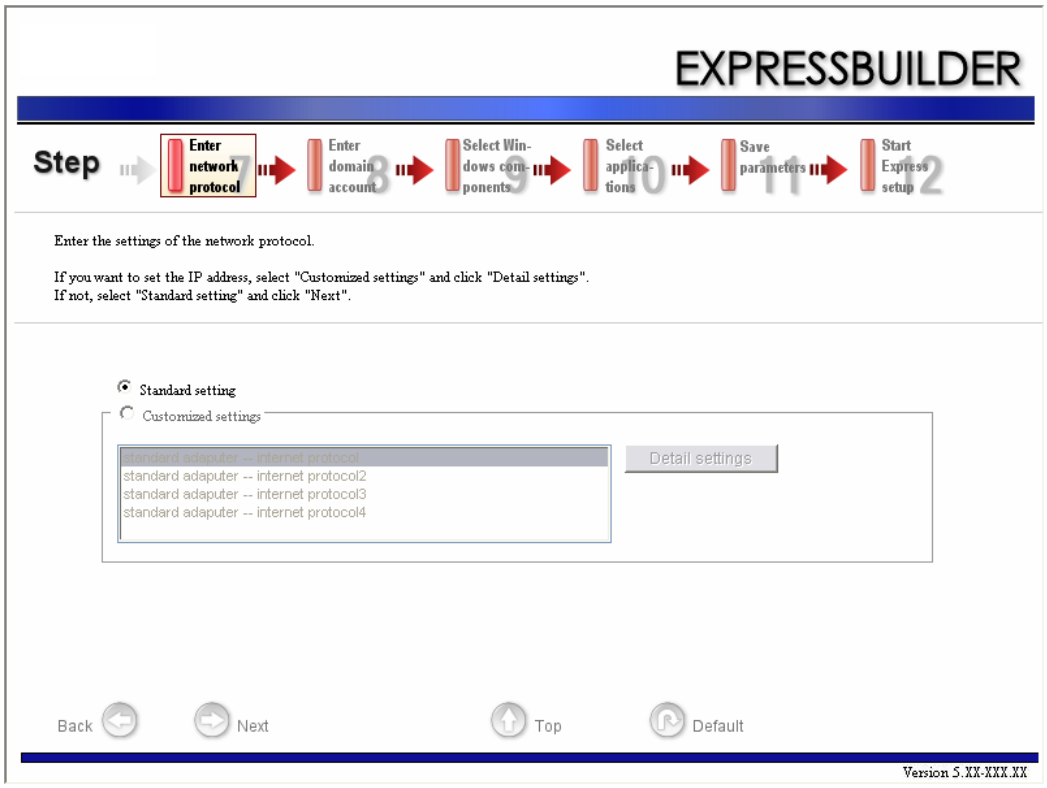

11. Enter the domain or workgroup name to be used.

The [Enter domain and account] step is displayed. Confirm the parameters, modify if necessary, and click [Next].

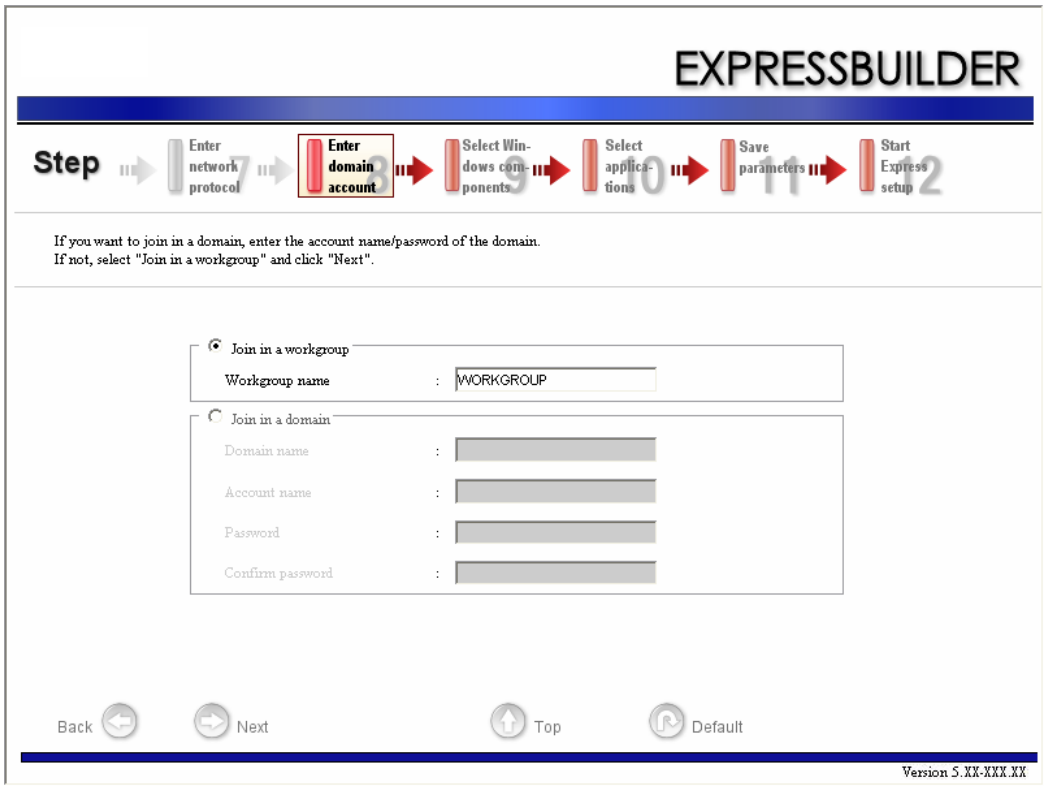

12. Select the components to install.

The [Select Windows component] step is displayed. Confirm the parameters, modify if necessary, and click [Next].

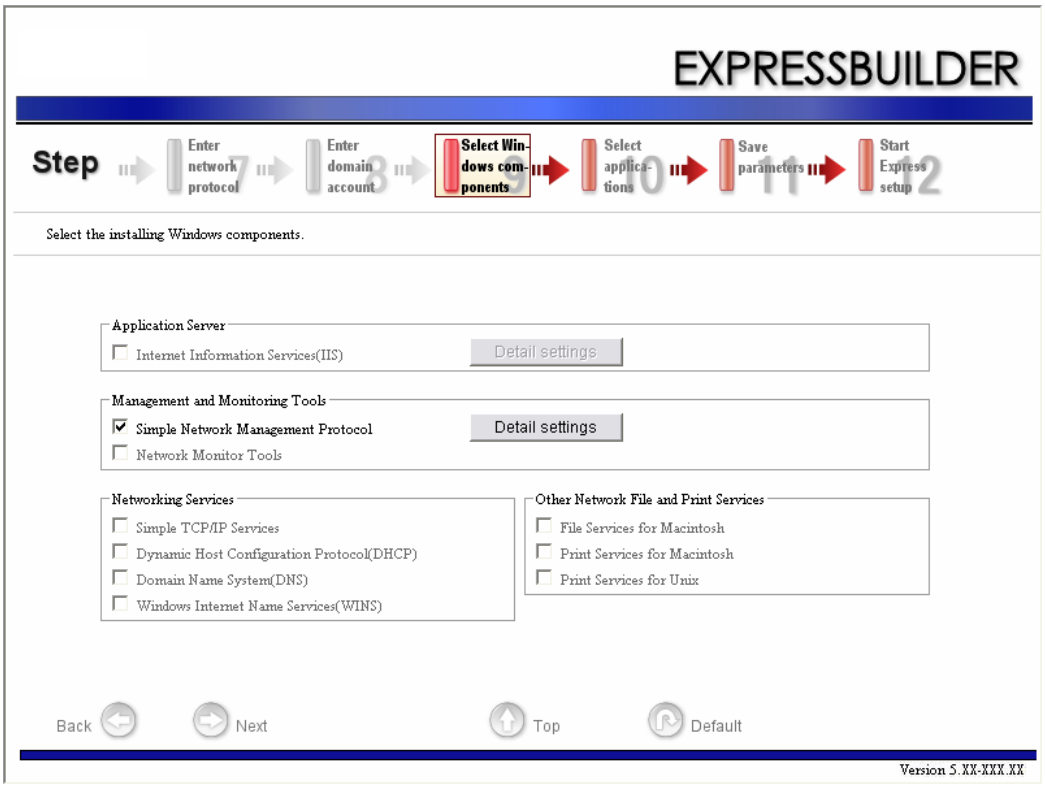

13. Select the applications to install.

The [Setting applications] step is displayed. Confirm the parameters, modify if necessary, and click [Next].

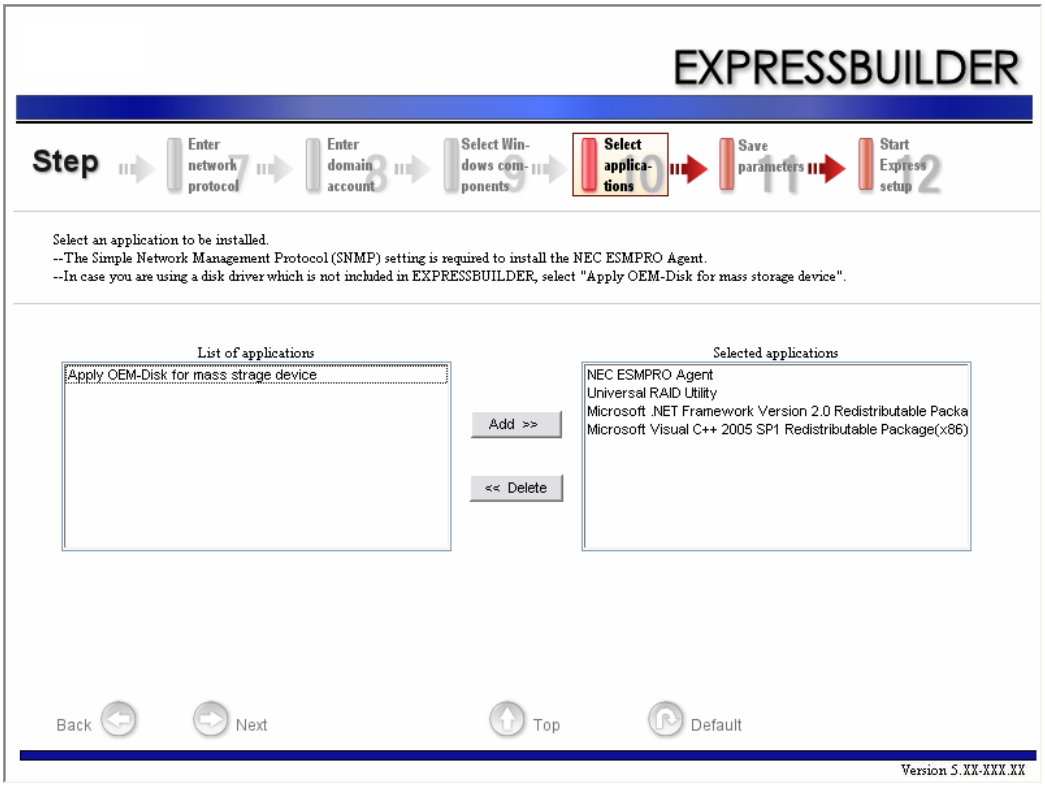

14. Save the parameters.

The [Save parameters] step is displayed.

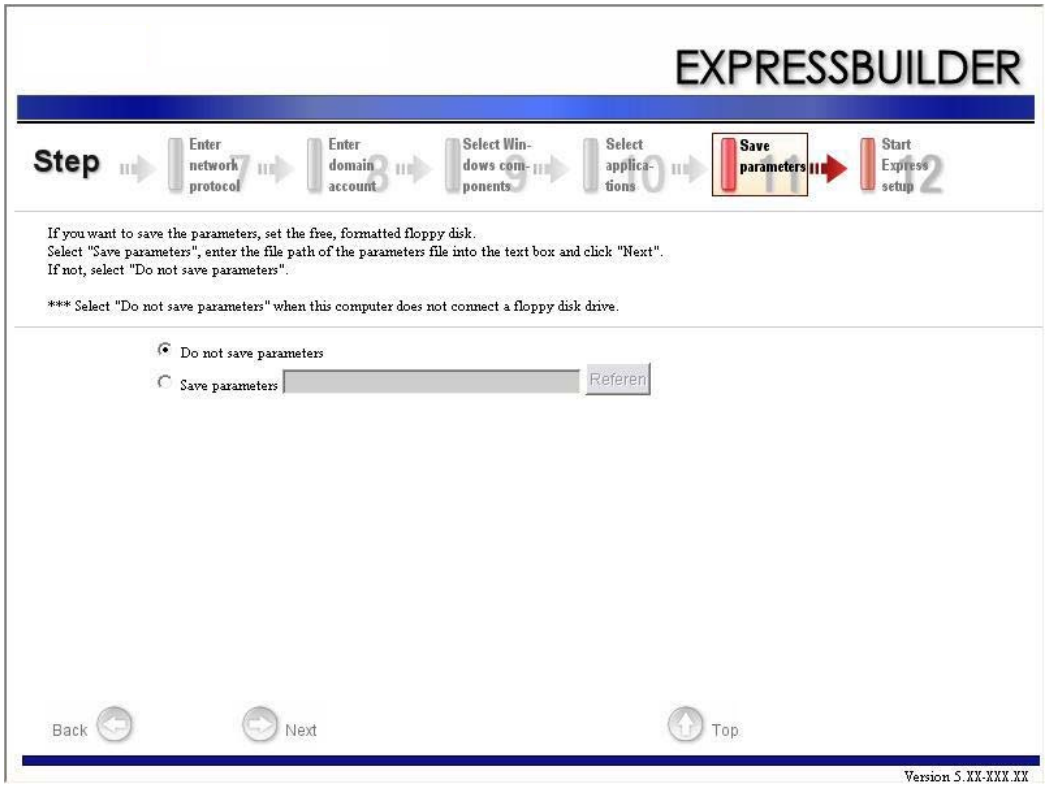

If you want to save the parameters , set the free formatted floppy disk.

Select [Save parameters], enter the file path of the parameters files into the text box and click [Next].

Otherwise, select [Do not save parameters].

15. The Express Setup will start when you click [Perform] in the [Start Express setup] step.

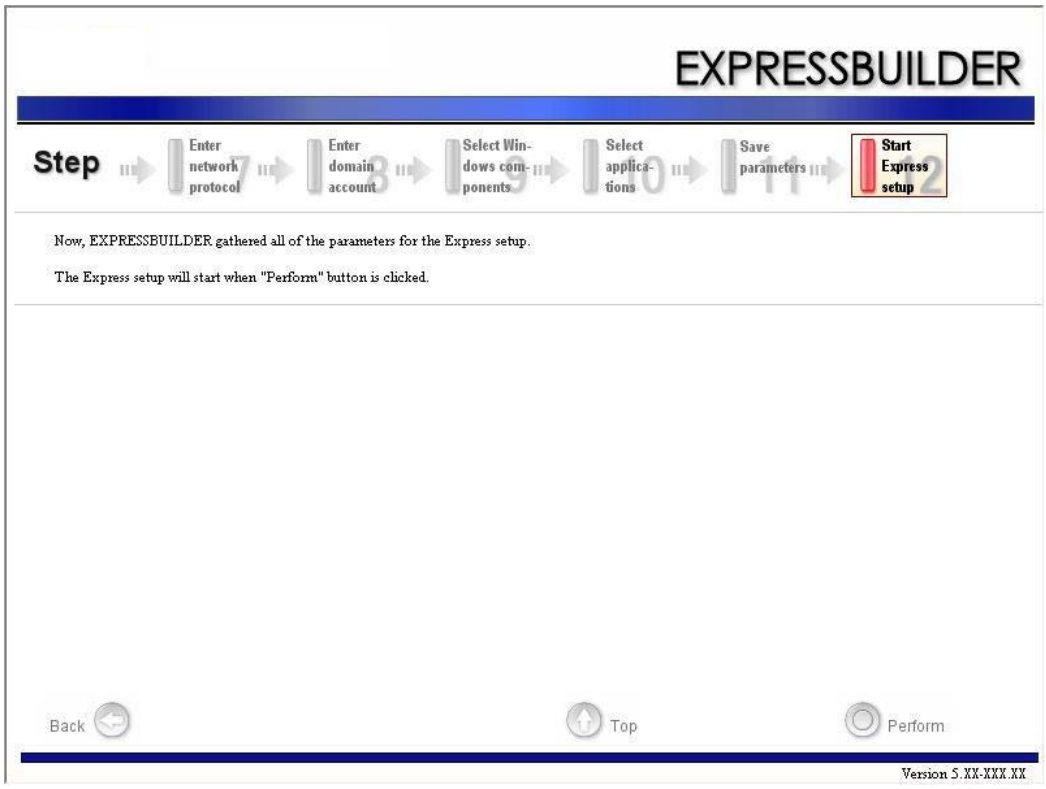

16. Copy the optional Mass Storage Driver module.

If you install an optional Mass Storage Driver, the message will be shown.

Insert the CD-ROM or floppy disk attached to the Mass Storage Driver and follow the on-screen messages.

17. Remove the ExpressBuilder DVD from the Optical Disc drive when prompted to do so.

If you proceed with the setup by using the setup parameters file, remove the floppy disk from the floppy disk drive.

Insert the Windows Server 2003 CD-ROM into the Optical Disc drive.

The [Agree Software License Agreement] screen appears.

18. Read the contents carefully and click [Yes] if you agree. If you do not agree, click [No].

⚠ Caution

- If you do not agree to this agreement, the setup terminates and Windows Server 2003 will not be installed.
- If "NetWare Gateway (and Client) Service" is specified to install, the window to specify the details of "NetWare Gateway (and Client) Service" pops up on the first logon. Specify the appropriate value.

19. If you selected [Install the Service Pack] at the [Specify Medium Partition] step, follow the procedure below.

a. Follow the message to take Windows Server 2003 CD-ROM out of the Optical Disc drive.

b. Follow the message to insert Windows Server 2003 Service Pack 2 into the Optical Disc drive.

⚠ Caution

If you are installing the Windows CD-ROM that contains Service Pack 2 to your system, you do not have to apply the Service pack 2 again.

Windows Server 2003 and the specified application will be installed automatically. Install and configure the device drivers.

20. If you install Microsoft Windows Server 2003 R2, insert the Microsoft Windows Server 2003 R2 Standard Edition DISC 2 or the Microsoft Windows Server 2003 R2 Enterprise Edition DISC 2 into the Optical Disc drive drive after the OS installation.

Follow the on-screen messages to complete the installation.

When the installation is finished, remove the optical disc from the Optical Disc drive, and restart the system.

Installing and Setting the Device Drivers

Follow these steps to install and configure the device drivers.

PROSet

> ***Notes**: All the operations related to Intel® PROSet is must be executed with administrator privileges. Operation via a [Remote Desktop Connection] is prohibited.*
>
> *To close the adapter teaming properties window without making any changes, click the Cancel button.*
>
> *Clicking the [OK] button will cause a temporary loss of network connectivity.*

Using PROSet enables the following items:

- Detailed information of the adapter confirmation.
- Loop back test, packet transmission test diagnosis and so on.
- Teaming setup.

Configuring several network adapters as one team provides the server with a tolerant environment and enhances throughput between the switches.

PROSet is necessary to use these features.

Follow the procedure below to install PROSet.

1. Insert the ExpressBuilder DVD into the Optical Disc drive.
2. The [Windows Explorer] dialog starts.
   - Procedure using a standard start menu
     Click Start menu and click [Windows Explorer].
   - Procedure using a classic start menu
     Click Start menu, point to [Programs], [Accessories] and click [Windows Explorer].
3. Run "dxsetup.exe" in the following directory.
   \001\win\winnt\dotnet\dl3\proset\win32
   The [Intel(R) PROSet - InstallShield Wizard] dialog starts.
4. Click [Next].
5. Choose "I accept the terms in the license agreement" and click [Next].
6. Click [Next].
7. Select [I accept the terms in the license agreement] and click [Next].
8. Click [Install].
   When [InstallShield Wizard Completed] window is displayed, click [Finished].

9. Remove the ExpressBuilder DVD from the drive, and restart the system.

> ***Notes**: If you make no changes to the parameters, click the [Cancel] button to close the dialog. Clicking the [OK] button will cause a temporary loss of network connectivity.*

Network Driver

Specify the details of the network driver.

Two standard network drivers will be installed automatically, but the link speed and duplex mode must be manually specified.

[When PROSet is not installed]

1. The [Local Area Connection Properties] dialog box appears.
   - Procedure using a standard start menu
     Click Start menu, click [Control Panel], click [Network Connections], and click [Local Area Connection].
   - Procedure using a classic start menu
     Click the Start menu, click [Settings] and click [Network Connections].
     The [Network Connections] dialog box appears.
     Right-click [Local Area Connection] and click [Properties] from the pop-up menu.
2. Click [Configure].
   The properties dialog box for the network adapter appears.
3. Click [Advanced] and specify a [Link Speed & Duplex] identical to the value specified for the HUB.
4. Click [OK] on the properties dialog box for network adapter.

[When PROSet is installed]

1. The [Intel PROSet] dialog box appears.
   - Procedure using a standard start menu
     Click Start menu, point to [Control Panel], [administrative tools], click [Computer Management] and then double click the [(Network Adapter Name)] in the Network Adapter list.
   - Procedure using the classic start menu
     Click Start menu, point to [Settings] and click [Control Panel].
     Click [Administrative Tools].
     Click [Computer Management] and then double click the [(Network Adapter Name)] in the Network Adapter list.
2. Click the [Link] and specify a [Speed & Duplex] value identical to the value specified for the HUB.
3. Click [Apply] and click [OK].

If necessary, add or delete any protocols and services.

This procedure can also be applied on the properties dialog box for the local area network which appears from the [Network and Dial-up Connection].

> ***Note**: We recommend you add [Network Monitor] at [Adding Services]. [Network Monitor] can monitor the frame (or the packet) that the computer installing [Network Monitor] sends or receives. This tool is valuable when analyzing network troubles. For more information on how to install the tool, see "Solving Problems Settings" on page 289 described later in this chapter.*

Optional Network Board Driver

Most drivers are automatically installed.

If this is not the case:

- either install the driver stored in the ExpressBuilder using the oprocedure described below,
- or refer to the installation manual provided with the board, if applicable.

Installation of the Optional Network Board Driver

1. Start the Device Manager.
2. Click [Network adapters] and double-click [(Network Adapter Name)].
   The [(Network Adapter Name) Properties] appears.

> ***Note**: [(Intel(R) PRO/1000...)] is the name of On-Board adapter. All the other names show the Optional Network Board.*

3. Click the [Driver] tab and click [Update Driver...].
   The [Hardware Update Wizard] appears.
4. Select the [Install from a list or specific location(Advanced)] radio button and click [Next].
5. Select the [Search for the best driver in these locations] radio button and check off the [Search removable media (floppy, CD-ROM...)] check box.
6. Check the [Include this location in the search] check box and specify a path.
   Click [Next].
7. Click [Finish].

Adapter Fault Tolerance (AFT)/Adaptive Load Balancing (ALB)

Adapter Fault Tolerance (AFT) is a feature that creates a group containing more than one adapter and automatically converts the process of the working adapter to the other adapter in the group when any trouble occurred on that adapter.

Adaptive Load Balancing (ALB) is a feature that creates a group containing more than one adapter and enhances the throughput by operating packet transmission from the server by all the adapters.

⚠ Caution

- AFT/ALB setup must be operated after installing the drivers and restarting the system.
- All the adapters specified as a group of Adapter Teaming must exist on the same LAN. If they are connected to separate switches, they will not work normally.
- The adapters specified as a group of Adaptive Load Balancing (ALB) can be connected only to the Switching Hub.
- When replacing the motherboard or optional network card, make sure to remove the adapter teaming before the exchange and recreate the adapter team once the exchange is completed.

If you want to use the AFT/ALB feature, follow the procedure below to setup.

1. The [Intel (R) PROSet] dialog box appears.

- Procedure using the standard start menu
  Click the Start menu, point to [Control Panel], [Administrative tools], and click [Computer Management] and then double click the [(Network Adapter Name)] in the Network Adapter list.
- Procedure using the classic start menu.
  Click the Start menu, point to [Settings] and click [Control Panel].
  Click [Administrative Tools].
  Click [Computer Management] and double click the [(Network Adapter Name)] in the Network Adapter list.

2. Select the [Teaming] tab and then check [Team with other adapters] and click [New Team...].

The [New Team Wizard] dialog box appears. Click [Next].

*Specify a name for the team if necessary.

3. Select the adapters to include in the team.
4. Select "Adapter Fault Tolerance" or "Adaptive Load Balancing" and click [Next].
5. Click [Finish].
6. If necessary to set the adapter priority setting, do as follows.
   If not, go to step 7.
   a. Click [Settings] tab on [TEAM:xxx #yy Properties].
   b. Click [Modify Team].
   c. Point to the adapter [Intel(R)PRO/1000....]and click [Set Primary] or [Set Secondary].
   d. Click [OK].
   e. The setup will go back to [EAM:xxx #yy Properties] and the priority setting will display in list ().
   f. Click [OK]
7. The setup will go back to [Intel (R) PROSet for Wired Connections] dialog box, so click [OK].
8. Restart the system.

Graphics Accelerator Driver

The standard graphics accelerator drivers that are mounted will be installed automatically. Follow the procedure below if it is necessary to install manually.

If you want to use an optional Graphics Accelerator Driver board, follow the document attached to the board to install the driver.

1. Insert the ExpressBuilder into the optical disc drive. Close the Autorun menu if it is displayed.
2. Click the Start menu, point to [Programs], [Accessories] and click [Windows Explorer].
3. Run "setup.exe" in the following directory.
   \001\win\winnt\dotnet\video\setup.exe.
4. Follow the on-screen message to proceed with the installation.
   If the dialog message "Digital Signature could not been found." appears, select [Yes] to continue.
5. Remove the ExpressBuilder from the optical disc drive, follow the on-screen instructions and restart the system.

SCSI Controller Driver

Update your system with the ExpressBuilder DVD attached to your system.

The SCSI controller driver will be installed automatically.

Installing SAS Controller Driver (LSI SAS3443E-R)

Update your system with the ExpressBuilder DVD attached to your system.

The SAS controller driver will be installed automatically.

Installing the RAID controller Driver (LSILogic MegaRAID SAS 8480E)

The RAID controller driver will be installed automatically.

Troubleshooting

The driver may sometimes not be installed during the OS installation. In this case, please install the driver as described in the procedure below.

1. Start [Device Manager] from [Start] menu → [Control Panel] → [Administrative Tools]→ [Computer Management].
2. Double-click the RAID Controller which the Device Manager lists as “Other device”.
3. Click [Update Driver].
4. When the "Update Device Driver Wizard" appears, select "No, not this time" and click [Next].
5. Select "Install from a list or specific location [Advanced]" and click [Next].
6. Select "Don't search. I will choose the driver to install" and click [Next].
7. Select "SCSI and RAID controller" and click [Next].
8. Click [Have Disk..].
9. Insert the ExpressBuilder DVD into the optical disc drive, enter "\002\win\winnt\oemfd\dotnet\fd1" into "copy manufacturer's file from:" and click [OK].
10. Specify the following driver and click [Next].

    [LSI Logic MegaRAID SAS 8480E RAID Controller]

The installation of the driver is completed. Restart the system according to the on-screen messages.

Available switch options for the Windows Server 2003 Boot.ini file.

Many different switches will be available if you edit the Boot.ini file.

For the available switch options, refer to the following information:

- Microsoft Knowledge Base - Article ID: 833721

  "Available switch options for the Windows XP and the Windows Server 2003 Boot.ini files"

If your system has a memory capacity in excess of 4GB in its installing, adding the /PAE switch in the Boot.ini file will enable the system to be installed with over 4GB of memory.

However, the Microsoft operating system products which support /PAE switch option are limited.

Refer to the following article in Microsoft Knowledge Base to check the supported products.

- Microsoft Knowledge Base - Aritcle ID: 291988

  "A description of the 4GB RAM tuning feature and the Physical Address Extension switch"

Below is the example on how to add /PAE switch to Boot.ini file.

1. Click [Start], point to [Settings], and then click [Control Panel].
2. In [Control Panel], double-click [System].
3. Click the [Advanced] tab, and then click [Settings] under [Setup and Recovery].
4. Under [System Setup], click [Edit] to open [Boot.ini].
5. Add "/PAE" to the [Operating Systems] section in the [Boot.ini] file, and then save it.

<Example of Boot.ini file>

[boot loader]
timeout=30
default=multi(0)disk(0)rdisk(0)partition(2)\WINDOWS
[operating systems]
multi (0)disk (0)rdisk (0)partition (2)\WINDOWS="Windows Server 2003" /fastdetect
multi (0)disk (0)rdisk (0)partition (2)\WINDOWS="Windows Server 2003, PAE" /fastdetect /PAE
C:\CMDCONS\BOOTSECT.DAT="Microsoft Windows Recovery Console" /cmdcons

***Note**: If you choose one of the items in the "Default operating system" drop-down list box in the [Setup and Recovery] group box, you can make your system start automatically from the switch you specified.*

Solving Problems Settings

Setup the following issue in advance so that your computer can recover from any trouble precisely and as soon as possible if it should occur.

Memory Dump (Debug Information)

This section describes the procedure used to collect the memory dump (debug information) in the server.

Caution

Cautions for the Memory Dump

- The maintenance service representative is in charge of collecting memory dump. You only need to specify the memory dump.
- If any trouble occurs after specifying the process below, a message informing that the system has a virtual memory shortage may appear, but continue to start the system. If you restart the system in such case, the memory dump may not be stored correctly.

Follow the procedure below to specify the memory dump.

1. Select [Control Panel] and click [System].
   The [System Properties] dialog box appears.
2. Select the [Advanced] tab.
3. Click [Settings] on the [Startup and Recovery] group box.

Caution

Windows Server 2003 x64 Editions

- We recommend you specify "Complete Memory Dump" to write the debug information.
  If the mounted memory size is larger than 2GB, "Complete Memory Dump" cannot be specified so specify "Kernel Memory Dump" instead.
- Specify a drive where there is a free area larger than the size of "the memory capacity mounted on Express server + 1MB".
- In case the mounted memory size exceeds 2GB due to the added memory, change the write debugging information to [Kernel Memory Dump] before adding memory. The size of the debugging information (memory dump) changes when

adding memory. Check the size of the empty space in the debugging information (memory dump) write destination drive.

Caution

Windows Server 2003

- We recommend you specify "Complete Memory Dump" to write the debug information.
  If the mounted memory size is larger than 2GB, "Complete Memory Dump" cannot be specified so specify "Kernel Memory Dump" instead.
- Specify a drive where there is a free area larger than the size of "the memory capacity mounted on Express server + 12MB" (In case the memory capacity is larger than 2GB, a free area of "2048+12MB" or more).
- In case the mounted memory size exceeds 2GB due to the added memory, change the write debugging information to [Kernel Memory Dump] before adding memory. The size of debugging information (memory dump) changes when adding memory. Check the size of the empty space in the debugging information (memory dump) write destination drive.

4. Specify "Complete memory dump" and modify [Dump file:] in the [Write debugging information] group box.

e.g. To write the debug information in D drive, write the file name "MEMORY.DMP".

D:\MEMORY.DMP

5. Click [Settings] on the [Performance] group box.

The [Performance Options] window appears.

6. Click the [Advanced] tab on the [Performance Options] window.

7. Click [Change] on the [Virtual memory] group box.

8. Modify [Initial Size] in the [Paging file size for selected drive] box to a value larger than [Recommended], and click [Set].

Caution

- The above-mentioned paging file size is recommended for collecting debug information (memory dump). A paging file with an initial size large enough to store the dump file in the boot drive is required.

Correct debug information might not be collected due to a virtual memory shortage when the paging file is insufficient, so set a paging file size large enough for the entire system.

- For more information on the "Recommended" value, see *"About the System Partition Size" on page 269*.
- If the memory is expanded, re-specify the paging file to suit the new memory size.

9. Click [OK].

A message prompting to restart the system may appear according to the modified specification. In such a ase, restart the system.

Windows Dr. Watson

Windows Dr. Watson is a debugger for application errors. If any application error is detected, Dr. Watson diagnoses the server and logs the diagnostic information (log). Follow the procedure below to instruct Dr. Watson to collect diagnostic information.

1. Click [Run] on Start menu.

2. Type "drwtsn32.exe" in the [Open] box, and click [OK].

The [Dr. Watson for Windows] dialog box appears.

3. Specify the location in which to store the diagnostic information in the [Log File Path] box.

The diagnostic information will be stored with the file name "DRWTSN32.LOG".

***Note**: You can not specify a network path. Specify a path on a local computer.*

4. Specify the location of the crash dump file in the [Crash Dump] box.

***Note**: "Crash Dump File" is a binary file that can be read with Windows Debugger.*

5. Check the following check boxes on the [Option] box.

- Dump Symbol Table
- Dump All Thread Contexts
- Add To Existing Log File
- Create Crash Dump File

For more information on each of the above functions, refer to the Online Help.

6. Click [OK].

Network Monitor

Using Network Monitor helps you investigate and manage the network troubles. To use Network Monitor, you need to restart the system after the installation has completed, so we recommend you install Network Monitor as soon as possible, before any network troubles can occur.

1. Point to [Settings] from the Start menu and click [Control Panel].
   The [Control Panel] dialog box appears.
2. Double-click [Add or Remove Programs].
   The [Add or Remove Programs] dialog box appears.
3. Click [Add/Remove Windows Component].
   The [Windows Components Wizard] dialog box appears.
4. Click [Management and Monitoring Tools] and then click [Details].
   The [Management and Monitoring Tools] dialog appears.
5. Click to select the [Network Monitor Tools] check box, and then click [OK].
6. The [Windows Components Wizard] dialog box appears again, so click [Next].
7. If the setup asks to install the disk, insert the OS CD-ROM into Optical Disc drive and click [OK].
8. Click [Finish] in the [Windows Component Wizard] dialog box.
9. Close the [Add or Remove Programs] dialog box.
10. Close the [Control Panel] dialog box.

To start Network Monitor, point to [Program] → [Administrative Tools] and click [NetworkMonitor]. For information on how to operate Network Monitor, refer to the Online Help.

Installing Maintenance Utilities

Various maintenance utilities are included in your ExpressBuilder.

See "Appendix 7: Installing and Using Utilities" on page 337 for more information on installing the utilities to your server or management workstations.

Updating the System - Applying Service Pack -

Caution

If you install the Windows Server 2003 CD-ROM including the Service Pack 2 to your system, you do not have to apply the Service Pack 2 again.

"Updating the System" is automatically executed by Express Setup.

Execute "Updating the System" in following cases.

- Modified system configuration.
- Recovered the system using recovery process.

See *"Updating the System - Applying Service Pack -" on page 323* section in Appendix D for details on the update process.

Making Backup Copies of System Information

The system information includes the current BIOS settings and any specific information for the server.

Save the information after completing the system setup.

Without the backup data, you will not be able to recover the information.

You can save the information as described in the following procedure:

1. Insert the ExpressBuilder DVD into the Optical Disc drive and reboot the system.
2. Select [Maintenance Tools (Normal mode)].
3. Select [English].
4. Select [Maintenance Utility].
5. Select [System Information Management].
6. Insert a floppy disk into the floppy disk drive.
7. Select [Save].

Installing with the OEM-FD for Mass Storage Device

This section explains how to setup with the OEM-FD. This is not a standard procedure. The detailed information is provided by the manual of the Mass Storage Device.

Installation of a Mass storage device not supported by Express Setup

If you would like to install or re-install the OS when the system has a new mass storage device not supported by the ExpressBuilder, you have to set as follows.

1. Read the manual supplied with the mass storage device before setting the server.
2. If the mass storage device is a RAID Controller, configure the RAID system before running the ExpressBuilder.
3. Boot the system from the ExpressBuilder DVD.
4.
   a. When the "Use Existing Array" dialog box appears, check "Skip Creating a Virtual disk".
   b. Check "Apply OEM-FD for Mass storage device".
5. Copy the driver for the mass storage device in the Express Setup.

   Insert the floppy disk attached to the mass storage device into the floppy disk drive.

   Follow the on-screen messages to continue the Express Setup.

Appendix 5: Installing Microsoft Windows Server 2003 without Express Setup

This section describes the procedures for installing Windows Server 2003 without using the Express Setup tool.

Notice

Service Packs supported by ExpressBuilder

The ExpressBuilder DVD attached to the server supports following combination of the OS installation media and Service Pack.

- Windows Server 2003 R2
  - OS installation media (with Service Pack 2)
  - OS installation media (No Service Pack) + Service Pack 2
  - OS installation media (No Service Pack)
- Windows Server 2003
  - OS installation media (with Service Pack 1)
  - OS installation media (with Service Pack 1) + Service Pack 2

Installing Service Pack

You can install the Service Pack on the server. If the Service Pack is not attached to your system, prepare it yourself.

When installing Windows Server 2003 R2, it is not necessary to apply Service Pack 1.

Updating System

If you change the configuration of the system, update your system with the ExpressBuilder DVD delivered with your system.

Re-installing to the Hard Disk which has been upgraded to Dynamic Disk

If you want to leave the existing partition when installing the system on the hard disk upgraded to Dynamic Disk, note the following issue:

- Do not select the partition where the operating system had been installed as the partition to install the operating system newly.
- Select "Use the current File System" for the format of operating system partition.

Magneto-Optical device

If you specify the file system as NTFS with a MO Device connected during the installation, the file system will not be converted normally. Disconnect the MO device and restart the installation from the beginning.

Media such as DAT

Do not connect such devices to the server before installing the operating system.

Floppy Disk Drive

No internal floppy disk drive is included in your system. Prepare an optional USB floppy disk drive if necessary.

About the Upgrade to Windows Server 2003 R2

The "in-place upgrade" from Windows Server 2003 to Windows Server 2003 R2 is not recommended because it may overwrite any files or registries, and cause unexpected impact to the system or the applications.

If you install Windows Server 2003 R2, backup the user data, and reinstall Windows Server 2003 R2 as described in *"Windows Server 2003 Clean Installation" on page 302*.

***Note**: The "in-place upgrade" is an overwrite upgrade from an installed Windows Server 2003 to Windows Server 2003 R2.*

About the System Partition Size

The minimum size for the partition where the system is to be installed can be calculated from the following formula.

Size necessary to install the system + Paging File Size + Dump File Size

Size necessary to install the system

= 3500 MB (Windows Server 2003 R2)

= 3500 MB (Windows Server 2003 with Service Pack 1)

= 3500 MB (Windows Server 2003 R2 with Service Pack 2)

= 5300 MB (Windows Server 2003 R2 + Service Pack 2)

= 5300 MB (Windows Server 2003 R2 with Service Pack 1 + Service Pack 2)

Paging File Size (Recommended)= Mounted Memory Size × 1.5

Dump file Size= Mounted Memory Size + 12 MB

Application size = Required size

⚠ Caution

- The above-mentioned paging file size is recommended for collecting debug information (memory dump). A paging file with an initial size large enough to store the dump file in the boot drive is required.
  It may be impossible to collect correct debugging information due to a virtual memory shortage if the paging file is insufficient, so we recommend you set a paging file large enough for the entire system.
- The maximum paging file size which can be set on one partition is 4095 MB. If the above paging file size exceeds 4095 MB, specify 4095 MB for the paging file size.
- The maximum dump file size for the system with more than 2 GB memory mounted is '2048 MB + 12 MB'.
- If you install any application program or the like, add necessary space to the partition to install these programs.

For example, if the mounted memory size is 512 MB, the minimally required partition size will be calculated by the above formula as follows:

3500 MB + (512 MB * 1.5) + (512 MB + 12 MB) + Application size= 4792 MB + Application size

If the required partition size is larger than the size of a hard disk drive, we recommend you split the file across several disks.

1. Set the "Size required for installation + Paging file size".
2. Set the debugging information (equivalent to the dump file size) so that it is written to a separate disk.

   (If necessary, install an additional new disk.)

Installing Microsoft Windows Server 2003

You will need the following for the installation of the Windows Server 2003:

- ExpressBuilder DVD
- Microsoft Windows Server 2003 Standard Edition (CD-ROM), Microsoft Windows Server 2003 Enterprise Edition (CD-ROM), Microsoft Windows Server 2003 R2 Standard Edition (CD-ROM), or Microsoft Windows Server 2003 R2 Enterprise Edition (CD-ROM).
- Microsoft Windows Server 2003 Service Pack (CD-ROM).
- User's Guide
- Getting Started
- Windows Server 2003 OEM-Disk for ExpressBuilder

Before installing, create Windows Server 2003 OEM-Disk for ExpressBuilder.

Creating "Windows 2003 OEM-Disk for ExpressBuilder"

You can create the Windows 2003 OEM-Disk for ExpressBuilder with the following two procedures:

Creating from the menu which appears when running BULL NovaScale Server with ExpressBuilder

Use this procedure if you have only the BULL NovaScale Server to create the Windows 2003 OEM-Disk for ExpressBuilder.

- If you have only the BULL NovaScale Server to create the Windows Server 2003 OEM-Disk for ExpressBuilder, use this procedure.

  1. Prepare a 3.5-inch floppy disks.
  2. Turn on your BULL NovaScale Server.
  3. Insert the ExpressBuilder DVD in the optical device drive.
  4. Pressthe Reset switch or press **Ctrl** + **Alt** + **Delete** to reboot the server. (You may also turn off and then on again to reboot the server.)
     The system will boot from the DVD and the ExpressBuilder starts.
  5. Select [Create the OEM-Disk for Windows] from the [Tools Menu].
  6. Select [Create a Windows Server 2003 OEM-Disk for ExpressBuilder] from [Create OEM-Disk] and click [Perform].
  7. Insert a diskette in the floppy disk drive according to the on-screen instruction.
     Windows Server 2003 OEM-Disk for ExpressBuilder will be created.
  8. Write-protect and label the diskette, then keep it in a safe place.

Creating from the [Autorun Menu]

This menu requires Microsoft Windows XP, Microsoft Windows Vista, Microsoft Windows Server 2003 (or later).

You can create the Windows Server 2003 OEM-Disk for ExpressBuilder from the [Autorun Menu], if you have the computer on which one of the above operating system operates.

Follow the steps below:

1. Prepare a 3.5-inch floppy disks.
2. Start the operating system.
3. Insert the ExpressBuilder DVD in the optical device drive.
   The Autorun menu is displayed.
4. Click [Create drive disk, and select [OEM Disk for Windows Server 2003].

> ***Note**: You can do the same operation using the menu displayed by a right-click.*

5. Insert the floppy disk into the floppy disk drive according to the message.
   Windows Server 2003 OEM-Disk for ExpressBuilder will be created.
6. Write-protect and label the diskette, then keep it safely.

Windows Server 2003 Clean Installation

This section explains how to perform a clean installation of Windows Server 2003.

1. Turn the system on.
2. Insert the Windows Server 2003 CD-ROM in the optical device drive.
3. Press **Ctrl** + **Alt** + **Delete** to reset the system.

   After a bootable operating system has been installed on the hard disk, press **Enter** while the message "Press any key to boot from CD..." is displayed at the top of the screen.

   If no bootable operating system exists on the hard disk, this step is unnecessary.

   The Windows Server 2003 setup screen will be displayed. If the screen is not displayed, **Enter** was not pressed properly.

   Retry after turning the system off and then on again.
4. Press **F6** in the few seconds when the window is in one of the following states:

   – "Setup is inspecting your computer's hardware configuration..." is displayed.

   – A screen with a solid blue background is displayed.

   ***Note**: There is no visible indication on screen when F6 has been pressed.*

5. When the following message is displayed, press **S**.

   Setup could not determine the type of one or more mass storage devices installed in your system, or you have chosen to manually specify an adapter.

   Currently, Setup will load support for the following mass storage devices.

   The following message is then displayed.

   Please inert the disk labeled

   manufacturer-supplied hardware support disk

   into Drive A:

   *Press ENTER when ready.

6. Insert the Windows Server 2003 OEM-Disk for ExpressBuilder into the floppy drive, and press **Enter**.
   A list of mass storage devices is displayed.
7. Select the [Intel(R) ESB2 SATA AHCI Controller (Server ESB2)] and press **Enter**.
8. Select the proper SCSI Adapter and press **Enter**.
   - [LSI MegaRAID SAS RAID Controller Driver (Server 2003 32-bit)]
   - [LSI MegaRAID SAS RAID Controller Driver (Server 2003 32-bit)]
   - [LSI Embedded MegaRAID (Windows XP/2003)]

9. When prompted to do so, press **Enter** to start the "Welcome to Setup" wizard. Once the installation of Windows Server 2003 is finished, the system reboots automatically.
   - Windows Server 2003: go to step 13.
   - Windows Server 2003 R2: go to step 10.
10. Log on to the system, the [Windows Setup] screen is displayed.

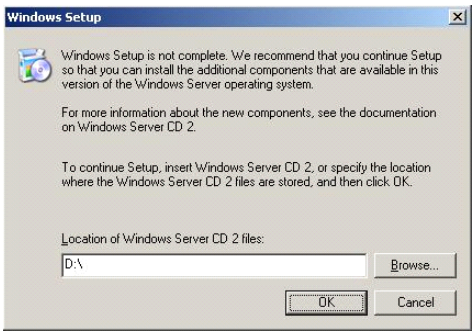

Figure 155: Windows Setup Screen

Caution

- In some cases, the [Windows Setup] screen may not be displayed.
  Be sure to install Microsoft Windows Server 2003 R2 DISC 2 according to the following procedures.
- You can install Microsoft Windows Server 2003 R2 DISC 2 after the application of "System update".
  Be sure to install Microsoft Windows Server 2003 R2 DISC 2. In this case, note that the [Windows Setup] screen is not displayed.

11. Insert Microsoft Windows Server 2003 R2 DISC 2 CD-ROM into the optical disc drive. Confirm the parameters and click [OK].
12. When the installation has completed, remove Microsoft Windows Server 2003 R2 DISC 2 CD-ROM from the optical disc drive, and restart the system.
13. Once the installation is completed, execute the tasks described in *"Driver Installation and Device Settings" on page 309* and *"Updating System" on page 296*.

Procedure for License Authentication

The Product Key used in the procedure for license authentication must match with the COA label.

Notes:

- *Execute the activation within 30 days. The system may be locked once 30 days have passed.*
- *The COA label may be attached to your server.*

Updating the System - Applying Service Pack -

To ensure normal system operation you should update your system in the following cases:

- The CPU was expanded from single processor to multi-processor.
- The system configuration was modified.
- The system was recovered using the recovery process.

The system update reinforces the system security. We recommend you apply this update. It does not need to be applied again when the Windows Server 2003 CD-ROM (in which ServicePack 2 is included) is installed.

Go on to *"Updating the System"" on page 306*.

Update the System and then apply the "Hotfix (KB921411)".

Caution

In the situation below, make sure to update the system and to apply the "Hotfix (KB921411)".

- Modified system configuration
- Recovered the system using recovery process.

Note: *If you use Windows Server 2003 CD-ROM which includes Service Pack 2, the application of "Hotfix (KB921411)" is not required.*

Applying the Hotfix (KB921411)

Apply the "Hotfix (KB921411)" before updating the system.

1. Log on to the system using an account with administrator authority (such as administrator).

2. Insert the ExpressBuilder DVD into the optical disc drive of the server.
3. Click the Start menu, select [Run], and then execute the following command.
   <When the English version of Windows Server 2003 R2 is used>
   \002\win\winnt\dotnet\qfe\enu\kb921411.exe
   <When the Simplified Chinese version of Windows Server 2003 R2 is used>
   \002\win\winnt\dotnet\qfe\chs\kb921411.exe
   <When the French version of Windows Server 2003 R2 is used>
   \002\win\winnt\dotnet\qfe\fra\kb921411.exe
4. When the following message is displayed, click [Next].

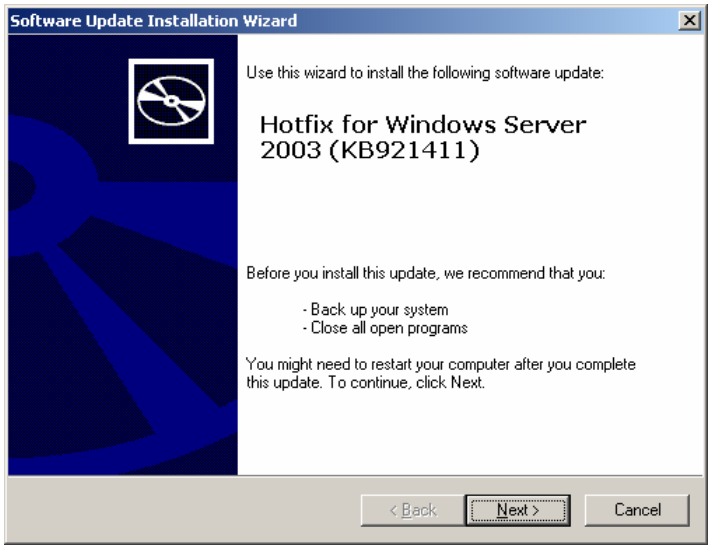

Figure 156: Software Update Installation Wizard

Follon the on-screen messages.

5. When the following message is displayed, make sure to click [Finish] to restart the system.

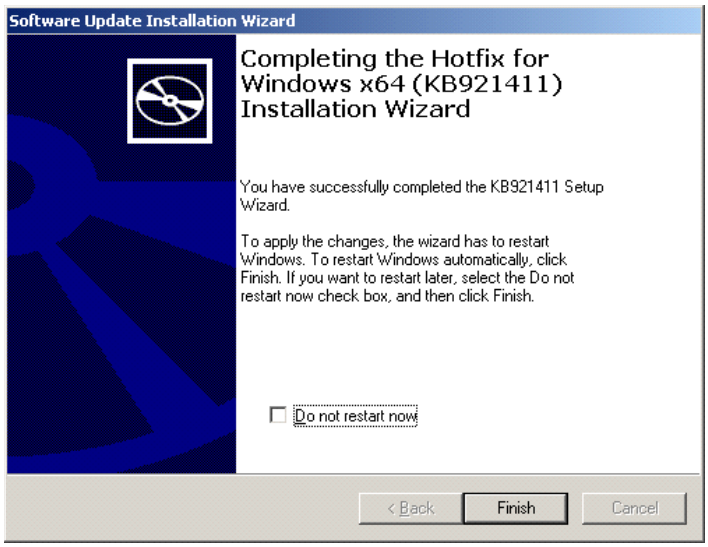

Figure 157: Software Update Installation Wizard

The Hotfix (KB921411) was successfully applied.

Updating the System"

The System Update applies the drivers necessary for the BULL NovaScale.

Follow this process after the Hotfix for Windows Server 2003 (KB921411) has been applied.

> ***Note**: If you install your system using the Windows CD-ROM that contains the Service Pack 2, you do not have to apply the Service pack 2 again.*

1. Log on to the system using an account administrator authority (such as administrator).
2. Insert the ExpressBuilder DVD into the optical disc drive.

   The Autorun Menu is displayed
3. Left-click on [Setup Windows], and then click [Update the system].

> ***Note**: You can also right-click on the Autorun Menu.*

Follow the on-screen messages to proceed. The [OK] dialog box is displayed.

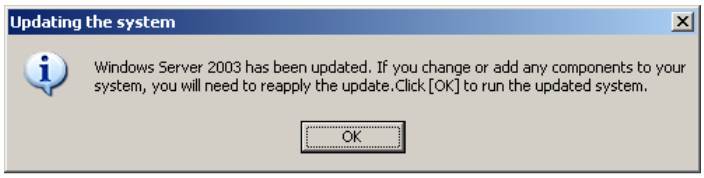

4. Click [OK] to restart the system.

   When the reboot starts, immediately remove the ExpressBuilder DVD from the optical disc drive.

⚠ Caution

During the "Updating the System", the following message may be shown, but there is no impact to the operation. Do not click [cancel] since it may be taken away after a few seconds.

Recovery Process

If the System Update is executed before the application of the "Hotfix for Windows x64 (KB921411)", "!" may be displayed on the USB root hub.

If "!" is displayed on the USB root hub, follow the process below:

1. Start the Windows Explorer, and click the [Tools] and [Folder Options].
2. Select the [Files and Folders] - [Hidden files and folders] - [Show hidden files and folders] radio button from Advanced settings in the [View] tab.
3. Check the following check box in the [Files and Folders] from Advanced settings in the [View] tab, and then click [OK].
   - Hide extensions for know file type
   - Hide protected operating system files [Recommended]

   When the message "You have chosen to display protected operating system files..." is displayed, click [Yes].
4. Make sure of the files.

   Open "<System drive:>\WINDOWS\system32\drivers" directory, and make sure usbhub.sys and usbport.sys exist in the directory.

   If you can not find them, copy the files according to the following process.

a. Open the "<System drive:>\WINDOWS\system32\dllcache" directory.

b. Copy usbhub.sys and usbport.sys from the directory noted above to "<Systemdrive:>\WINDOWS\system32\drivers".

5. Restart the system.
6. Refer to *"Applying the Hotfix (KB921411)" on page 304* and apply the "Hotfix for Windows (KB921411)".
7. Refer to *"Updating the System"" on page 306* and execute the system update.
8. Restart the system.

   The process is finished.

Driver Installation and Device Settings

This section describes how to install and setup various standard drivers mounted on the device.

For information on installing and setting up a driver that is not described in this section, please refer to the document delivered with the driver.

PROSet

PROSet is a utility that checks the function of network contained in the network driver.

Using PROSet enables the following items:

- Verify detailed information of the adapter.
- Diagnose loop back test, packet transmission test and so on.
- Setup of teaming.

Configuring several network adapters as one team provides the server a tolerant environment on any trouble and enhance throughput between the switches.

PROSet is necessary to use these features.

To install PROSet:

1. Insert the ExpressBuilder DVD into the optical device drive. If the Autorun menu is displayed, close the menu screen.
2. The [Windows Explorer] dialog starts.
   - In the case of the standard start menu, click Start menu and click [Windows Explorer].
   - In the case of the classic start menu, click Start menu, point to [Programs], [Accessories] and click [Windows Explorer].
3. Run "dxsetup.exe" in the following directory:
   <Optical Disc drive Letter>:\002\win\winnt\w2k3amd\dl3\proset\winx64
   The [Intel(R) PROSet - InstallShield Wizard] dialog starts.
4. Click [Next].
5. Choose "I accept the terms in the license agreement" and click [Next].
6. Click [Install].
7. When [InstallShield Wizard Completed] window is displayed, click [Finished].
8. Remove the ExpressBuilder DVD from the optical disc drive and restart the system.

Network Driver

Specify the details of the network driver.
The standard network driver that is mounted will be installed automatically, but the link speed and duplex mode need to be specified manually.

[When PROSet is not installed]

1. The [Local Area Connection Properties] dialog box is displayed.
   - Procedure with the standard start menu: click Start menu, [Control Panel], [Network Connections], and [Local Area Connection].
   - Procedure with the classic start menu:
     a. Click Start menu, Click [Settings] and Click [Network Connections]. The [Network Connections] dialog box is displayed.
     b. Right-click [Local Area Connection] and click [Properties] from pop-up menu.
2. Click [Configure].
   The property dialog box for the network adapter is displayed.
3. Click [Advanced] and specify the same value for [Link Speed & Duplex] and for the HUB.
4. Click [OK] on the property dialog box for network adapter.

[When PROSet is installed]

1. The [Intel PROSet] dialog box appears.
   * Procedure with the standard start menu
     Click Start menu, point to [Control Panel], [Administrative tools], and click [Computer Management] and then double click the [(Network Adapter Name)] in the Network Adapter list.
   * Procedure with the classic start menu
     a. Click Start menu, point to [Settings] and click [Control Panel].
     b. Click [Administrative tools].
     c. Click [Computer Management] and double click the [(Network Adapter Name)] in the Network Adapter list.
2. Click [(Network Adapter Name)] in the list.
3. Click the [Link] and specify the [Speed & Duplex] value the same as the value specified for HUB.
4. Click [Apply] and click [OK].

You can also add or delete any protocols and services if necessary.

You can operate the process on the property dialog box for local area network which can be displayed from [Network and Dial-up Connection].

***Note**: We recommend you add [Network Monitor] at [AddingServices]. [Network Monitor] can monitor the frame (or the packet) that the computer installing [Network Monitor] sends or receives. This tool is valuable when analyzing network trouble.*

Re-install the Network Driver

The network driver will be installed automatically.

Adapter Fault Tolerance (AFT)/Adaptive Load Balancing (ALB)

Adapter Fault Tolerance (AFT) is a feature that creates a group containing more than one adapter and converts the process of the working adapter to the other adapter in the group when any trouble occurred on that adapter.

Adaptive Load Balancing (ALB) is a feature that creates a group containing more than one adapter and enhance the through put by operating packet transmission from the server by all the adapters.

Refer to *"Adapter Fault Tolerance (AFT)/Adaptive Load Balancing (ALB)" on page 284* for more information.

Graphics Accelerator Driver

The drivers for the graphics accelerator cards that are installed in the server will setup automatically.

If you remove an additional graphics card, make sure to remove its corresponding driver.

Should it be necessary to install manually the drivers, follow the procedure below.

1. Insert the ExpressBuilder DVD into the Optical Disc drive.
   If the autorun menu is displayed, close the menu screen.
2. Click the Start menu, point to [Programs], [Accessories] and click [Windows Explorer].
3. Run "setup.exe" in the following directory.
   \002\win\winnt\w2k3amd\video\setup.exe
4. Follow the on-screen messages to proceed with the installation.
   If the "Digital Signature could not been found." dialog message appears, select [Yes] to continue.
5. Remove the ExpressBuilder DVD from the optical disc drive, restart the system.

Installing SCSI Controller Drivers

Update the drivers for your system using the ExpressBuilder DVD shipped with your system.

The SCSI drivers will be installed automatically.

Installing SAS Controller Driver (LSI SAS3443E-R)

Update your system with the ExpressBuilder DVD attached to your system.

The SAS controller driver will be installed automatically.

Installing a RAID controller Driver (LSILogic MegaRAID SAS 8480E)

Troubleshooting

The driver may sometimes not be installed during the OS installation. In this case, please install the driver as described in the procedure below.

1. Start [Device Manager] from [Start] menu → [Control Panel] → [Administrative Tools]→ [Computer Management].
2. Double-click the RAID Controller which the Device Manager lists as “Other device”.
3. Click [Update Driver].
4. When the "Update Device Driver Wizard" appears, select "No, not this time" and click [Next].
5. Select "Install from a list or specific location [Advanced]" and click [Next].
6. Select "Don't search. I will choose the driver to install" and click [Next].
7. Select "SCSI and RAID controller" and click [Next].
8. Click [Have Disk..].
9. Insert the ExpressBuilder DVD into the optical disc drive, enter "\002\win\winnt\oemfd\dotnet\fd1" into "copy manufacturer's file from:" and click [OK].
10. Specify the following driver and click [Next].

    LSI Logic MegaRAID SAS 8480E RAID Controller]

The installation of the driver is completed. Restart the system according to the on-screen messages.

About the Windows Activation

Windows Server 2003 must be activated before it can be used. The Windows activation process is as follows.

> ***Note**: The activation process is not required for Windows Server 2003 R2.*

1. Click [Run] on [Start] menu.
   Type the following in the [Open:] box, and click [OK].
   oobe/msoobe /a

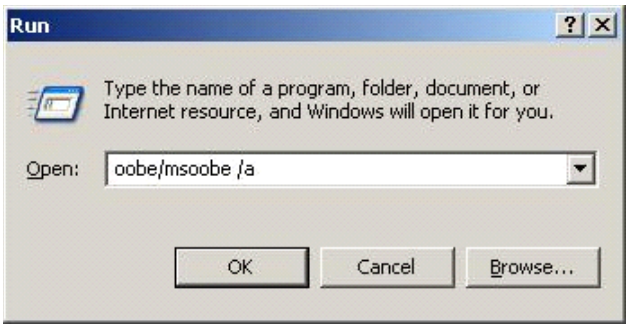

Figure 158: "Run" Dialog Box

2. When the screen below is displayed, click [Next].

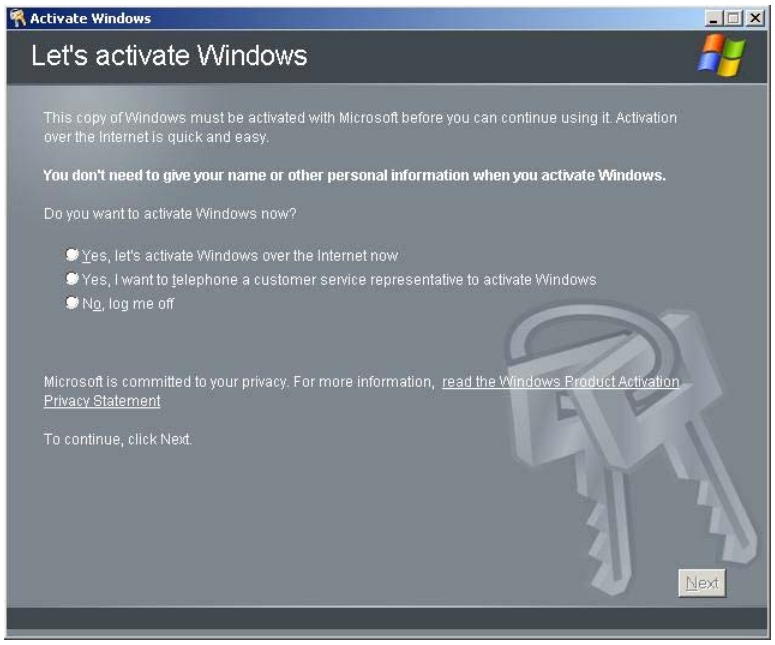

Figure 159: Windows Activation Screen (1)

The following screen is displayed.

3. Follow the on-screen messages to proceed with the activation.

Available Switch Options for the Windows Server 2003 Boot.ini File

Refer to *"Available switch options for the Windows Server 2003 Boot.ini file." on page 288*.

Setting for Collecting Memory Dump (Debug Information)

Use the procedure described in *"Memory Dump (Debug Information)" on page 289*.

Appendix 6: Installing Microsoft Windows Server 2003 x64 Editions without Express Setup

This section describes the procedures for installing Windows Server 2003 x64 Editions without using the Express Setup tool.

Notice

Service Packs supported by ExpressBuilder

The ExpressBuilder DVD attached to the server supports following combination of the OS installation media and Service Pack.

- Windows Server 2003 R2 x64 Edition
  - OS installation media (with Service Pack 2)
  - OS installation media (No Service Pack) + Service Pack 2
  - OS installation media (No Service Pack)

Installing Service Pack

You can install the Service Pack on the server. If the Service Pack is not attached to your system, prepare it yourself.

Updating System

If you change the configuration of the system, execute “Update the system” in the Windows Autorun menu.

Re-installing to the Hard Disk which has been upgraded to Dynamic Disk

If you want to leave the existing partition when installing the system on the hard disk upgraded to Dynamic Disk, note the following issue:

- Do not select the partition where the operating system had been installed as the partition to install the operating system newly.
- Select "Use the current File System" for the format of operating system partition.

Magneto-Optical device

If you specify the file system as NTFS with a MO Device connected during the installation, the file system will not be converted normally. Disconnect the MO device and restart the installation from the beginning.

Media such as DAT

Do not connect such devices to the server before installing the operating system.

Floppy Disk Drive

No internal floppy disk drive is included in your system. Prepare an optional USB floppy disk drive if necessary.

About the System Partition Size

The system partition size can be calculated from the following formula.

Size necessary to install the system + Paging File Size + Dump File Size + Application Size

Size necessary to install the system

= 4100 MB (Windows Server 2003 x64 Editions)

= 4100 MB (Windows Server 2003 x64 Editions with Service Pack 2)

= 5900 MB (Windows Server 2003 x64 Editions with Service Pack 2 CD)

Paging File Size (Recommended)= Mounted Memory Size × 1.5

Dump file Size= Mounted Memory Size + 1 MB

Application Size = Required Size

⚠ Caution

- The above-mentioned paging file size is recommended for collecting debug information (memory dump). A paging file with an initial size large enough to store the dump file in the boot drive is required.
  It may be impossible to collect correct debugging information due to a virtual memory shortage if the paging file is insufficient, so we recommend you set a paging file large enough for the entire system.
- Regardless of the size of the mounted memory, or the Write debugging information (type of memory dump), the maximum size of the dump file is 'The size of the mounted memory + 1MB'.
- If you install any application program or the like, add necessary space to the partition to install these programs.

For example, if the mounted memory size is 512 MB, the minimal size of the partition will be calculated by the above formula as follows:

4100 MB + (512 MB * 1.5) + (512 MB + 1 MB) + Application Size = 5381 MB + Application Size

If the required partition size is larger than the size of a hard disk drive, we recommend you split the file across several disks.

1. Set the "Size required for installation + Paging file size".
2. Set the debugging information (equivalent to the dump file size) so that it is written to a separate disk.

   (If necessary, install an additional new disk.)

Installing Microsoft Windows Server 2003 x64 Editions

You will need the following for the installation of the Windows Server 2003 x64 Editions:

- ExpressBuilder DVD
- Microsoft Windows Server 2003 R2 Standard x64 Edition (CD-ROM) / Microsoft Windows Server 2003 R2 Enterprise x64 Edition (CD-ROM)
- Microsoft Windows Server 2003 x64 Editions Service Pack 2 (CD-ROM)
- User's Guide
- Getting Started
- Windows Server 2003 x64 Editions OEM-Disk for ExpressBuilder

Before installing, create Windows Server 2003 x64 Editions OEM-Disk for ExpressBuilder.

Creating the "Windows 2003 x64 EditionsOEM-Disk for ExpressBuilder"

You can create the Windows 2003 x64 Editions OEM-Disk for ExpressBuilder using one of the following two procedures:

Creating from the menu which appears when running BULL NovaScale Server with ExpressBuilder

Use this procedure if you have only the BULL NovaScale Server to create the Windows 2003 OEM-Disk for ExpressBuilder.

1. Prepare a 3.5-inch floppy disks.
2. Turn on your BULL NovaScale Server.
3. Insert the ExpressBuilder DVD in the optical device drive.
4. Press the reset switch or press **Ctrl** + **Alt** + **Delete** to reboot the server. (You may also turn off and then on again to reboot the server.)
   The system will boot from the DVD and the ExpressBuilder starts.
5. Select [Create the OEM-Disk for Windows] from the [Tools Menu].
6. Select [Create a Windows Server 2003 x64 Editions OEM-Disk for ExpressBuilder] from [Create OEM-Disk] and click [Perform].
7. Insert a diskette in the floppy disk drive according to the on-screen instruction. Windows Server 2003 x64 Editions OEM-Disk for ExpressBuilder will be created.
8. Write-protect, label the diskette, then keep it in a safe place.

Creating from the [Autorun Menu]

This menu requires Microsoft Windows XP, Microsoft Windows Vista, Microsoft Windows Server 2003 (or later).

You can create the Windows Server 2003 x64 Editions OEM-Disk for ExpressBuilder from the [Autorun Menu], if you have the computer on which one of the above operating system operates.

Follow the steps below:

1. Prepare a 3.5-inch floppy disks.
2. Start the operating system.
3. Insert the ExpressBuilder DVD in the optical device drive.
   The Autorun menu is displayed.
4. Click [Create drive disk, and select [OEM Disk for Windows Server 2003 x64].

> ***Note**: You can do the same operation using the menu displayed by a right-click.*

5. Insert the floppy disk into the floppy disk drive according to the message.
   Windows Server 2003 x64 Editions OEM-Disk for ExpressBuilder will be created.
6. Write-protect and label the diskette, then keep it safely.

Windows Server 2003 x64 Editions Clean Installation

This section explains how to perform a clean installation of Windows Server 2003 x64 Editions.

1. Turn the system on.
2. Insert the Windows Server 2003 x64 Editions CD-ROM in the optical device drive.
3. Press **Ctrl** + **Alt** + **Delete** to reset the system.

   After a bootable operating system has been installed on the hard disk, press **Enter** while the message "Press any key to boot from CD..." is displayed at the top of the screen.

   If no bootable operating system exists on the hard disk, this step is unnecessary.

   The Windows Server 2003 x64 Editions setup screen will be displayed. If the screen is not displayed, **Enter** was not pressed properly.

   Retry after turning the system off and then on again.
4. Press **F6** in the few seconds when the window is in one of the following states:

   – "Setup is inspecting your computer's hardware configuration..." is displayed.

   – A screen with a solid blue background is displayed.

   ***Note**: There is no visible indication on screen when F6 has been pressed.*

5. When the following message is displayed, press **S**.

   Setup could not determine the type of one or more mass storage devices installed in your system, or you have chosen to manually specify an adapter.

   Currently, Setup will load support for the following mass storage devices.

   The following message is then displayed.

   Please inert the disk labeled

   manufacturer-supplied hardware support disk

   into Drive A:

   *Press ENTER when ready.

6. Insert the Windows Server 2003 x64 Edition OEM-Disk for ExpressBuilder into the floppy disk drive, and press **Enter**.

   A list of mass storage devices is displayed.
7. Select the [Intel(R) ESB2 SATA AHCI Controller (Server ESB2)] and press **Enter**.
8. Select the proper SAS Adapter and press **Enter**.

   Continue performing tasks according to the subsequent messages that appear.

9. When prompted to do so, press **Enter** to start "Welcome to Setup".
10. Once the installation of Windows Server 2003 x64 Edition is completed, the system reboots automatically.
11. Log on to the system, the [Windows Setup] screen is displayed.

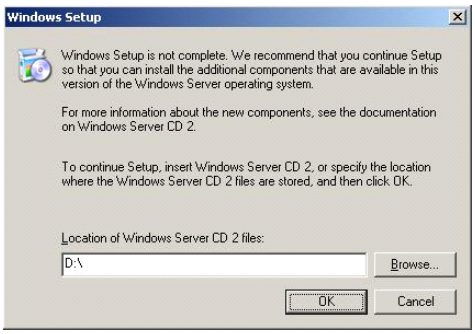

Figure 160: Windows Setup Screen

⚠ Caution

- In some cases, the [Windows Setup] screen may not be displayed.
  Be sure to install Microsoft Windows Server 2003 R2 x64 Edition DISC 2 according to the following procedures.
- You can install Microsoft Windows Server 2003 R2 x64 Edition DISC 2 after the application of "System update".
  Be sure to install Microsoft Windows Server 2003 R2 x64 Edition DISC 2. In this case, note that the [Windows Setup] screen is not displayed.

12. Insert Microsoft Windows Server 2003 R2 x64 Edition DISC 2 CD-ROM into the optical disc drive.

    Confirm the parameters and click [OK].
13. When the installation has completed, remove Microsoft Windows Server 2003 R2 x64 Edition DISC 2 CD-ROM from the optical disc drive, and restart the system.

    Once the installation is completed, be sure to execute the tasks described in *"Driver Installation and Device Settings" on page 328* and *"Updating System" on page 317* of this chapter.

Updating the System - Applying Service Pack -

To ensure normal system operation you should update your system in the following cases:

- The CPU was expanded from single processor to multi-processor.
- The system configuration was modified.
- The system was recovered using the recovery process.

The system update reinforces the system security. We recommend you apply this update. It does not need to be applied again when the Windows Server 2003 x64 Editions CD-ROM (in which ServicePack 2 is included) is installed.

If you install the Windows Server 2003 x64 Editions CD-ROM which contains Service Pack 2, you do not have to apply "Hotfix for Windows x64" or "Hotfix for Windows Server 2003 (KB921411)". Go on to *"Updating the System"" on page 325*.

Update the System and then apply the "Hotfix (KB921411)".

Caution

In the situation below, make sure to update the system and to apply the "Hotfix (KB921411)".

- Modified system configuration
- Recovered the system using recovery process.

***Note**: If you use Windows Server 2003 x64 Editions CD-ROM which includes Service Pack 2, the application of "Hotfix (KB921411)" is not required.*

Applying the Hotfix (KB921411)

Apply the "Hotfix (KB921411)" before updating the system.

1. Log on to the system using an account with administrator authority (such as administrator).
2. Insert the ExpressBuilder DVD into the optical disc drive of the server.
3. Click the Start menu, select [Run], and then execute the following command.

   <When Windows Server 2003 x64 Editions is used>

   \002\win\winnt\w2k3amd\qfe\jpn\kb921411.exe

4. When the following message is displayed, click [Next].

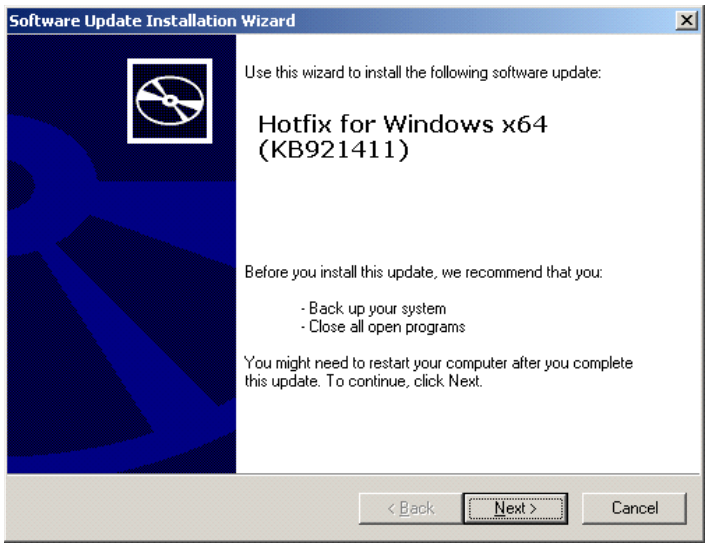

Figure 161: Software Update Installation Wizard

Follon the on-screen messages.

5. When the following message is displayed, make sure to click [Finish] to restart the system.

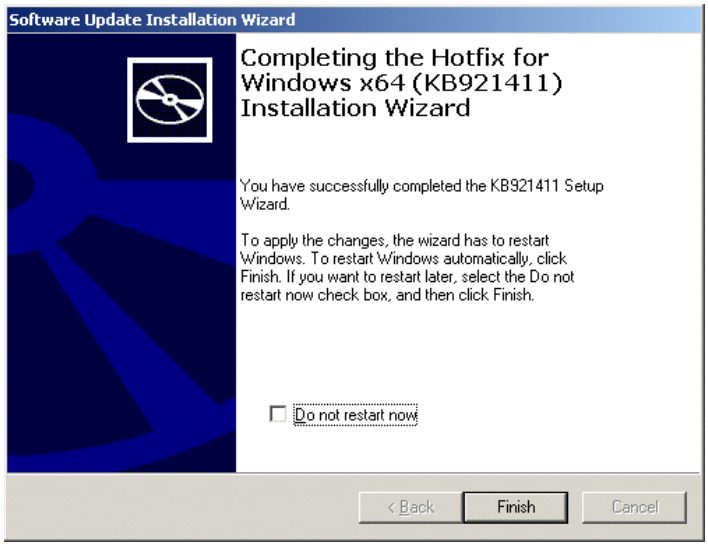

Figure 162: Software Update Installation Wizard

The Hotfix (KB921411) was successfully applied.

Updating the System"

The System Update applies the drivers necessary for the BULL NovaScale.

Follow this process after the Hotfix for Windows x64 (KB921411) or the Hotfix for Windows Server 2003 (KB921411) have been applied.

> **Note**: *If you install your system using the Windows CD-ROM that contains the Service Pack 2, you do not have to apply the Service pack 2 again.*

1. Log on to the system using an account administrator authority (such as administrator).
2. Insert the ExpressBuilder DVD into the optical disc drive.
   The Autorun Menu is displayed
3. Left-click on [Setup Windows], and then click [Update the system].

> **Note**: *You can also right-click on the Autorun Menu.*

Follow the on-screen messages to proceed. The [OK] dialog box is displayed.

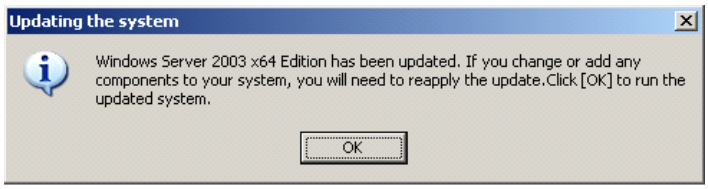

4. Click [OK] to restart the system.
   When the reboot starts, immediately remove the ExpressBuilder DVD from the optical disc drive.

⚠ Caution

During the "Updating the System", the following message may be shown, but there is no impact to the operation. Do not click [cancel] since it may be taken away after a few seconds.

Recovery Process

If the System Update is executed before the application of the "Hotfix for Windows x64 (KB921411)", "!" may be displayed on the USB root hub.

If "!" is displayed on the USB root hub, follow the process below:

1. Start the Windows Explorer, and click the [Tools] and [Folder Options].
2. Select the [Files and Folders] - [Hidden files and folders] - [Show hidden files and folders] radio button from Advanced settings in the [View] tab.
3. Check the following check box in the [Files and Folders] from Advanced settings in the [View] tab, and then click [OK].
   - Hide extensions for know file type
   - Hide protected operating system files [Recommended]

   When the message "You have chosen to display protected operating system files..." is displayed, click [Yes].
4. Make sure of the files.

   Open "<System drive:>\WINDOWS\system32\drivers" directory, and make sure usbhub.sys and usbport.sys exist in the directory.

   If you can not find them, copy the files according to the following process.

   a. Open the "<System drive:>\WINDOWS\system32\dllcache" directory.

   b. Copy usbhub.sys and usbport.sys from the directory noted above to "<Systemdrive:>\WINDOWS\system32\drivers".
5. Restart the system.
6. Refer to *"Applying the Hotfix (KB921411)" on page 324* and apply the "Hotfix for Windows x64 (KB921411)".
7. Refer to *"Updating the System"" on page 325* and execute the system update.
8. Restart the system.

   The process is finished.

Driver Installation and Device Settings

This section describes how to install and setup various standard drivers mounted on the device.

For information on installing and setting up a driver that is not described in this section, please refer to the document delivered with the driver.

PROSet

***Notes**: All the operations relating to Intel® PROSet is must be executed using administrator privileges. Operation using the [Remote Desktop Connection] is prohibited.*

To close the adaper teaming properties dialog box without making any changes, please click on [Cancel].

Clicking the [OK] button will cause a temporary loss of network connectivity.

PROSet is a utility that checks the function of network contained in the network driver.

Using PROSet enables the following items:

- Verify detailed information of the adapter.
- Diagnose loop back test, packet transmission test and so on.
- Setup of teaming.

Configuring several network adapters as one team provides the server a tolerant environment on any trouble and enhance throughput between the switches.

PROSet is necessary to use these features.

To install PROSet:

1. Insert the ExpressBuilder DVD into the optical device drive. If the Autorun menu is displayed, close the menu screen.
2. The [Windows Explorer] dialog starts.
   - In the case of the standard start menu, click Start menu and click [Windows Explorer].
   - In the case of the classic start menu, click Start menu, point to [Programs], [Accessories] and click [Windows Explorer].
3. Run "dxsetup.exe" in the following directory:
   <Optical Disc drive Letter>:\002\win\winnt\w2k3amd\dl3\proset\winx64
   The [Intel(R) PROSet - InstallShield Wizard] dialog starts.

4. Click [Next].
5. Choose "I accept the terms in the license agreement" and click [Next].
6. Click [Install].
7. When [InstallShield Wizard Completed] window is displayed, click [Finished].
8. Remove the ExpressBuilder DVD from the optical disc drive and restart the system.

Network Driver

Specify the details of the network driver.

The standard network driver that is mounted will be installed automatically, but the link speed and duplex mode need to be specified manually.

IP addresses cannot be set when the "Internet Protocol (TCP/IP)" check box is OFF. Check ON the "Internet Protocol (TCP/IP)" check box to be able to set IP addresses.

[When PROSet is not installed]

1. The [Local Area Connection Properties] dialog box is displayed.
   - Procedure with the standard start menu: click Start menu, [Control Panel], [Network Connections], and [Local Area Connection].
   - Procedure with the classic start menu:
     a. Click Start menu, Click [Settings] and Click [Network Connections]. The [Network Connections] dialog box is displayed.
     b. Right-click [Local Area Connection] and click [Properties] from pop-up menu.
2. Click [Configure].
   The property dialog box for the network adapter is displayed.
3. Click [Advanced] and specify the same value for [Link Speed & Duplex] and for the HUB.
4. Click [OK] on the property dialog box for network adapter.

[When PROSet is installed]

1. The [Intel PROSet] dialog box appears.
   * Procedure with the standard start menu
     Click Start menu, point to [Control Panel], [Administrative tools], and click [Computer Management] and then double click the [(Network Adapter Name)] in the Network Adapter list.
   * Procedure with the classic start menu
     a. Click Start menu, point to [Settings] and click [Control Panel].
     b. Click [Administrative tools].
     c. Click [Computer Management] and double click the [(Network Adapter Name)] in the Network Adapter list.

2. Click [(Network Adapter Name)] in the list.
3. Click the [Link] and specify the [Speed & Duplex] value the same as the value specified for HUB.
4. Click [Apply] and click [OK].

You can also add or delete any protocols and services if necessary.

You can operate the process on the property dialog box for local area network which can be displayed from [Network and Dial-up Connection].

***Note**: We recommend you add [Network Monitor] at [AddingServices]. [Network Monitor] can monitor the frame (or the packet) that the computer installing [Network Monitor] sends or receives. This tool is valuable when analyzing network trouble.*

5. Check the [Include this location in the search] check box and and specifiy the correct path.
6. Click [Next].
7. Click [Finish].

Re-install the Network Driver

The network driver will be installed automatically.

Optional Network Board Driver

If you want to use an optional Network Board (Gigabit adapter), the network driver will be installed automatically. Therefore, the driver attached to the Network board should not be used. If necessary, install the driver stored in ExpressBuilder DVD.

When using 100BASE TX adapters:

"\002\win\winnt\w2k3amd\dl3\pro100\winx64"

When using 1000BASE T adapters:

"\002\win\winnt\w2k3amd\dl3\pro1000\winx64"

If the installation procedure is not clear, refer to the installation procedure described below.

If available, you can also refer to the manual provided with the board.

Installing the Optional Network Board Driver

1. Start Device Manager.

2. Click [Network adapters] and Double-Click [(Network Adapter Name)].
   [(Network Adapter Name) Properties] is displayed.

> *Note: [(Intel(R) PRO/1000...)] is the name of On-Board adapter. All other names show the Optional Network Board.*

3. Click the [Driver] tab and click [Update Driver...].
   [Hardware Update Wizard] is displayed.
4. Select the [Install from a list or specific location(Advanced)] radio button and click [Next].
5. Select the [Search for the best driver in these locations] radio button and check off the [Search removable media (floppy, CD-ROM...)] check box.
6. Check the [Include this location in the search] check box and specifiy the correct path. See *"Optional Network Board Driver" on page 330*.
7. Click [Next].
8. Click [Finish].

Adapter Fault Tolerance (AFT)/Adaptive Load Balancing (ALB)

Adapter Fault Tolerance (AFT) is a feature that creates a group containing more than one adapter and converts the process of the working adapter to the other adapter in the group when any trouble occurred on that adapter.

Adaptive Load Balancing (ALB) is a feature that creates a group containing more than one adapter and enhance the through put by operating packet transmission from the server by all the adapters.

This feature includes AFT feature.

⚠ Caution

- AFT/ALB setup must be operated after installing the drivers and restarting the system.
- All the adapters specified as a group of Adapter Teaming must exist on the same LAN. If they are connected to the separate switches, they will not work normally.
- The adapters specified as a group of Adaptive Load Balancing (ALB) can be connected to only Switching Hub.
- When exchanging the motherboard or the optional network card, make sure to remove the adapter team before the exchange and recreate the adapter team once the exchange is completed.

If you want to use AFT/ALB feature:

1. Open the Teaming Wizard.

   * The procedure in the case of the standard start menu

   Click Start menu, point to [Control Panel], [administrative tools], and click [Computer Management] and then double click the [(Network Adapter Name)] in the Network Adapter list.

   * The procedure in the case of the classic start menu

   a. Click Start menu, point to [Settings] and click [Control Panel].
   b. Click [Administrative Tools].
   c. Click [Computer Management] and double click the [(Network Adapter Name)] in the Network Adapter list.

2. Select [Teaming] tab and then check on [Team with other adapters] and click [New Team...].

   The [New Team Wizard] dialog box appears. Click [Next]. (Specify a name for the team if it necessary.)

3. Select the adapters to include in the team.
4. Select "Adapter Fault Tolerance" or "Adaptive Load Balancing" and click [Next].
5. Click [Finish].
6. If it is necessary to set the adapter priority setting, follow the steps below. Otherwise, go through to step 7.

   a. Click the [Settings] tab on [TEAM:xxx #yy Properties].
   b. Click [Modify Team].
   c. Point to the adapter [Intel(R)PRO/1000....] and click [Set Primary] or [Set Secondary].
   d. Click [OK].
   e. The setup will go back to [EAM:xxx #yy Properties] and the priority setting will display in the list ().
   f. Click [OK]

7. The setup goes back to the [Intel(R) PROSet for Wired Connections] dialog box. Click [OK].
8. Restart the system.

Graphics Accelerator Driver

The drivers for the graphics accelerator cards that are installed in the server will setup automatically.

If you remove an additional graphics card, make sure to remove its corresponding driver.

Should it be necessary to install manually the drivers, follow the procedure below.

1. Insert the ExpressBuilder DVD into the Optical Disc drive.

   If the autorun menu is displayed, close the menu screen.

2. Click the Start menu, point to [Programs], [Accessories] and click [Windows Explorer].
3. Run "setup.exe" in the following directory.

   \002\win\winnt\w2k3amd\video\setup.exe
4. Follow the on-screen messages to proceed with the installation.

   If the "Digital Signature could not been found." dialog message appears, select [Yes] to continue.
5. Remove the ExpressBuilder DVD from the optical disc drive, restart the system.

Installing SCSI Controller Drivers

Update the drivers for your system using the ExpressBuilder DVD shipped with your system.

The SCSI controller drivers will be installed automatically.

Installing SAS Controller Driver (LSI SAS3443E-R)

Update your system with the ExpressBuilder DVD attached to your system.

The SAS controller driver will be installed automatically.

Installing a RAID controller Driver (LSILogic MegaRAID SAS 8480E)

Troubleshooting

The driver may sometimes not be installed during the OS installation. In this case, please install the driver as described in the procedure below.

1. Start [Device Manager] from [Start] menu → [Control Panel] → [Administrative Tools]→ [Computer Management].
2. Double-click the RAID Controller which the Device Manager lists as “Other device”.
3. Click [Update Driver].
4. When the "Update Device Driver Wizard" appears, select "No, not this time" and click [Next].
5. Select "Install from a list or specific location [Advanced]" and click [Next].
6. Select "Don't search. I will choose the driver to install" and click [Next].
7. Select "SCSI and RAID controller" and click [Next].
8. Click [Have Disk..].
9. Insert the ExpressBuilder DVD into the optical disc drive, enter "\002\win\winnt\oemfd\dotnet\fd1" into "copy manufacturer's file from:" and click [OK].

The installation of the driver is completed. Restart the system according to the on-screen messages.

About the Windows Activation

Windows Server 2003 x64 Editions must be activated before it can be used. The Windows activation process is as follows.

1. Click [Run] on [Start] menu.
   Type the following in the [Open:] box, and click [OK].
   oobe/msoobe /a

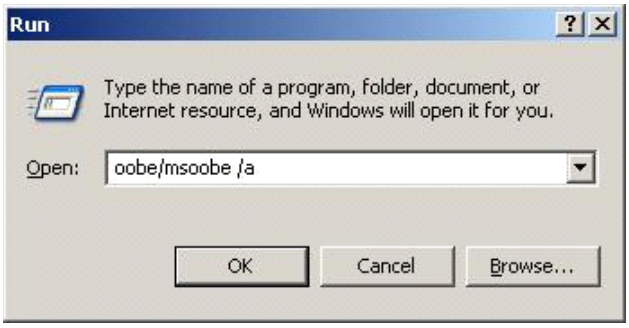

Figure 163: "Run" Dialog Box

2. When the screen below is displayed, click [Next].

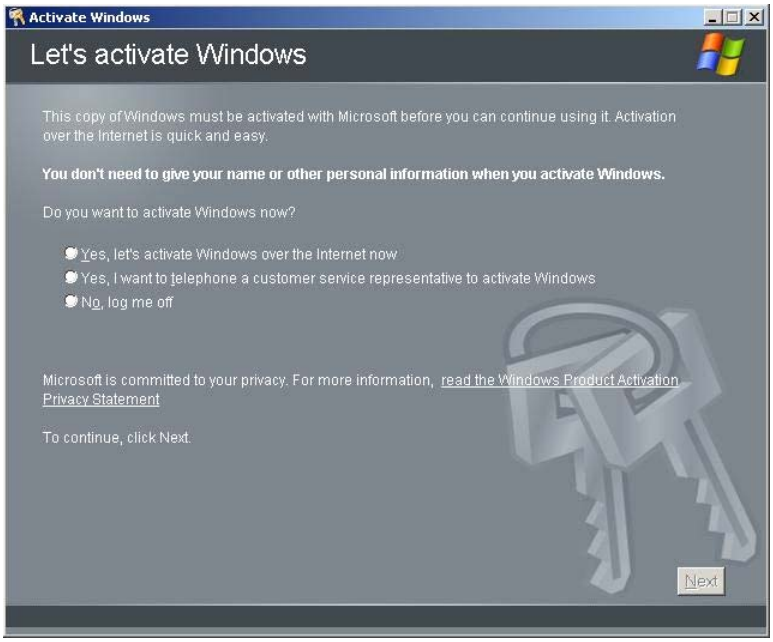

Figure 164: Windows Activation Screen (1)

The following screen is displayed.

3. Follow the on-screen messages to proceed with the activation.

Figure 165: Windows Activation Screen (2)

Setting for the Memory Dump Collection (Debug Information)

Use the procedure described in *"Memory Dump (Debug Information)" on page 289*.

Appendix 7: Installing and Using Utilities

This section describes how to use the ExpressBuilder DVD that comes with your server and to install the utilities stored on the ExpressBuilder.

ExpressBuilder

The ExpressBuilder helps you install the Operating system/the Management software or use the maintenance utilities.

When you insert the ExpressBuilder disk into the DVD drive and reboot the system, the following menu appears.

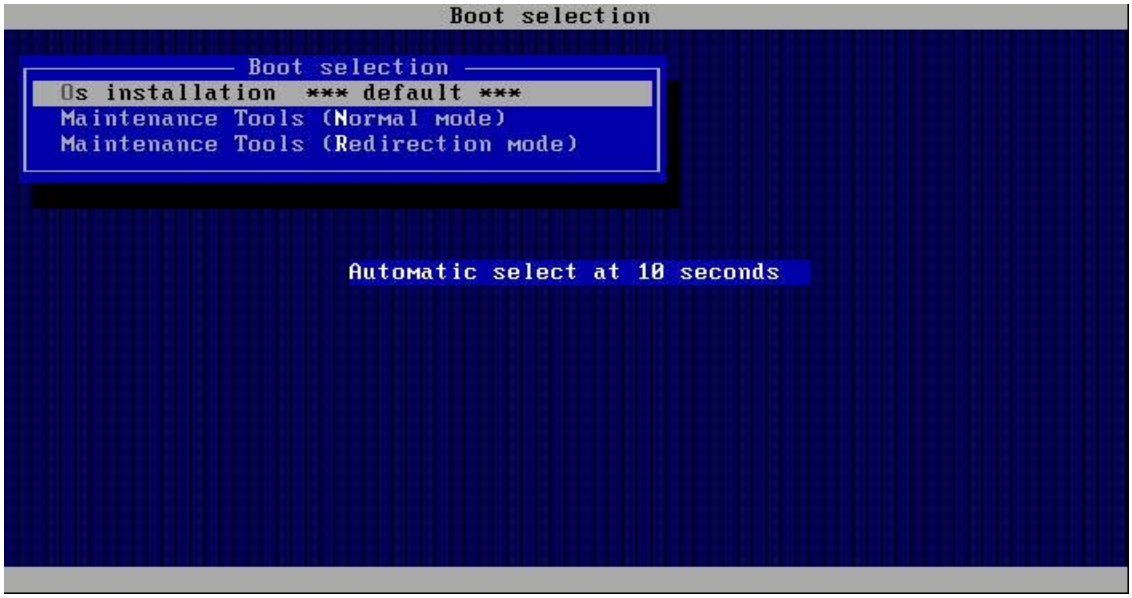

■ OS installation

If you select this item, the Top menu appears.

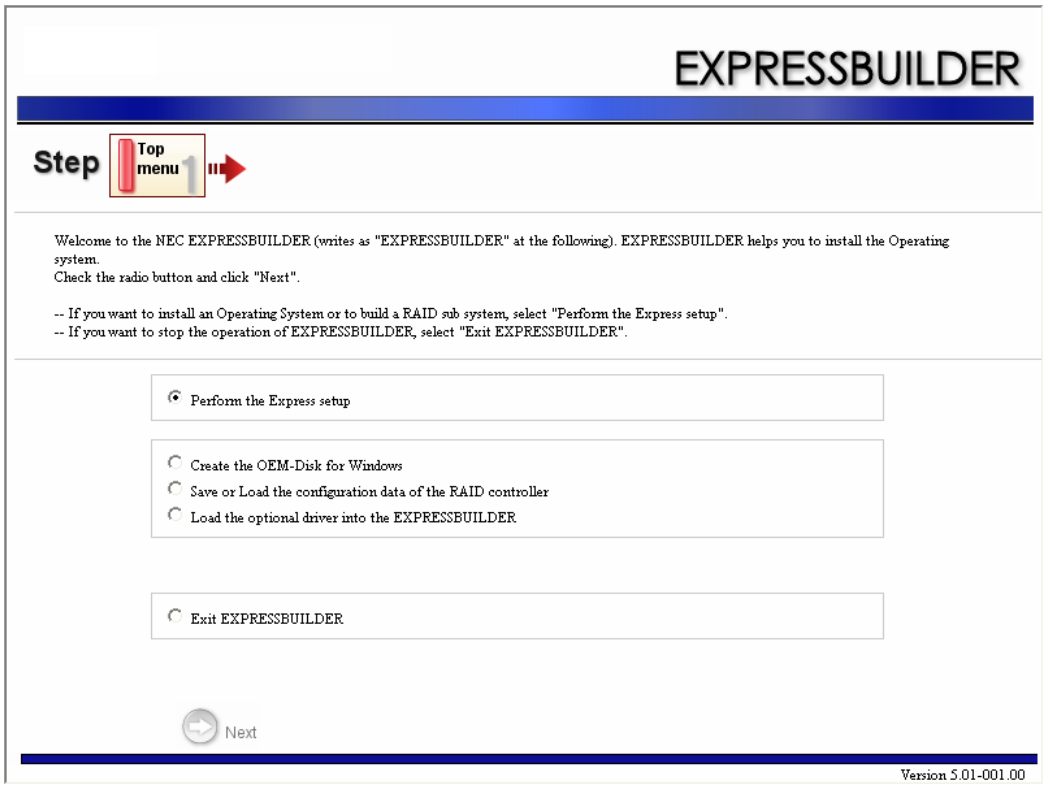

⚠ Caution

- This tool is a Configuration Tool built on Windows PE 2.0 technology.
  An automatic reboot occurs after 72 hours from the start.
- The configuration with Windows PE 2.0 supports Windows Server 2003 (32bit) and Windows Vista Business (32-bit (x86)), no other operating system is supported.

You can use the Express Setup (see *"Appendix 4: Installing the Operating System with Express Setup" on page 264*) or the following functions from this menu.

- Create the OEM-Disk
  You can create the Windows OEM-Disk to use at the Windows manual setup.
- Load the driver
  This function is not usually used. You may have to use it if you add a new device to the server. (see *"Appendix 4: Installing the Operating System with Express Setup" on page 264*.)

■ Maintenance Tools (Normal Mode)

If you select this item, the Tool menu appears.

You can use the below functions for maintenance.

- Maintenance Utility
  The Maintenance Utility is usually used by the service representative. (See *"Maintenance Utility" on page 237*)
- BIOS/FW Updating
  You can update the system BIOS using a floppy disk (prepare a 3.5" floppy disk). (See *"BIOS/FW Updating" on page 238*).
- ROM-DOS Startup FD
  The ROM-DOS Startup FD is used to start the ROM-DOS system.(See *"ROM-DOS startup FD" on page 238*).
- Test and diagnostics
  This function allows you to diagnose this computer. (See *"Test and diagnostics" on page 238*).

■ Maintenance Tools (Redirection Mode)

If you want to operate this computer via the BIOS redirection (the console-less function), select this item.

***Note**: If you operate this computer via the Remote KVM function, select the "Maintenance Tools (Normal mode)".*

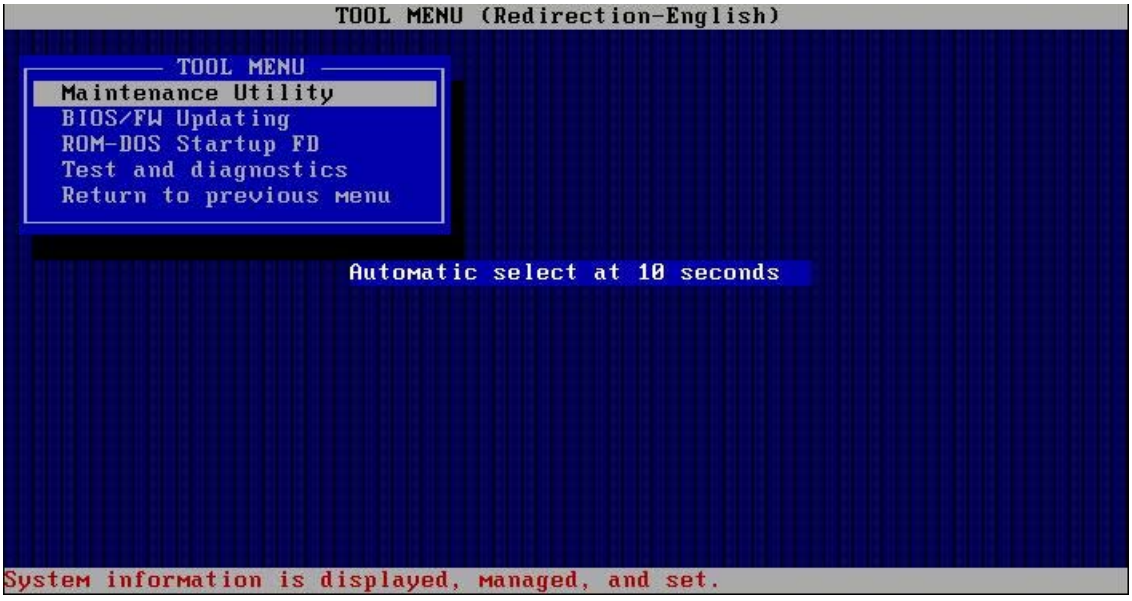

The menu's functions are the same as the "Maintenance Tools (Normal Mode)".

Autorun Menu

When the ExpressBuilder disk is inserted into the DVD drive, Windows automatically launches the menu as shown below.

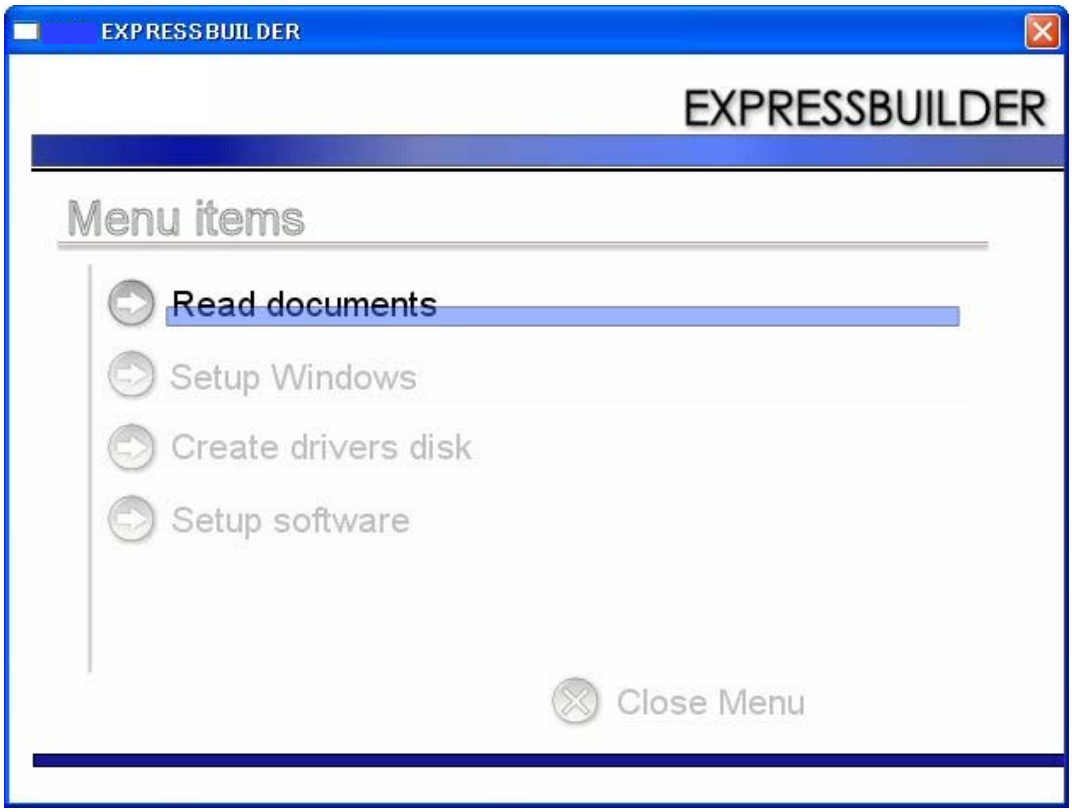

This menu is used to:

- Read the User's Guide or the other documents,
- Update the server system (Windows drivers), and
- Install the management software.

> ***Notes***:
>
> - *This menu requires Microsoft Windows XP, Vista or Windows Server 2003 (or later).*
> - *Some documents are provided in PDF format. Use the Adobe Reader to view or print these documents.*

If the menu does not appear, select "My computer" by using the Explorer, and double-click the icon of the DVD drive that contains the ExpressBuilder DVD.

Some menu items are grayed-out when the logon user does not have the authority of the administrator or the menu item is not available for your system.

To use the menu, click on the menu items, or click the right mouse button on the menu window.

Parameter File Creator

"Parameter File Creator" is a tool to create the [Parameters file] that is used for configuring the server with the Express Setup (see *"Appendix 4: Installing the Operating System with Express Setup" on page 264* for details).

If you use the Parameters file created by the Express Setup and the Parameter File Creator to operate the setup, the setup can be done automatically except for a few key inputs to confirm the specification. You can also install the system with the same specifications as before when re-installing the system. We recommend you create a [Parameters file] to setup the servers from the ExpressBuilder.

When using a floppy disk, a USB floppy disk drive is required.

Caution

You cannot create a [Parameters file] for Microsoft Windows Server 2003 x64 Editions.

***Note**: You can install Windows Server 2003 without a [Parameters file]. Also, you can modify/newly create the[Parameters file] during the setup with the ExpressBuilder.*

Parameters File

This section describes how to specify the setup information that is necessary for the OS installation and creation using a Parameters File.

Follow the procedure below.

Caution

Do not remove the ExpressBuilder DVD from the drive during the parameters file creation.

1. Start the OS.
2. Insert the ExpressBuilder DVD into the Optical Disc drive.
   The menu appears.

3. Right-click on the screen or left-click [Setup Windows]. The menu displayed below appears.

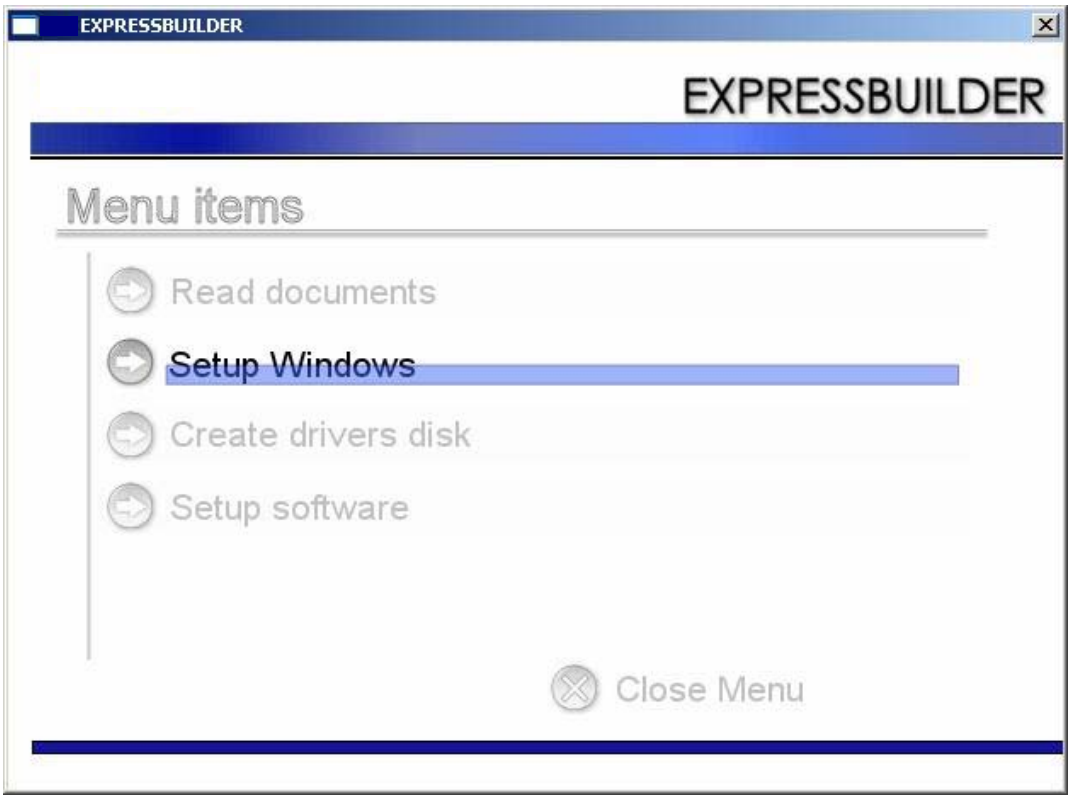

4. Click [Parameter File Creator].

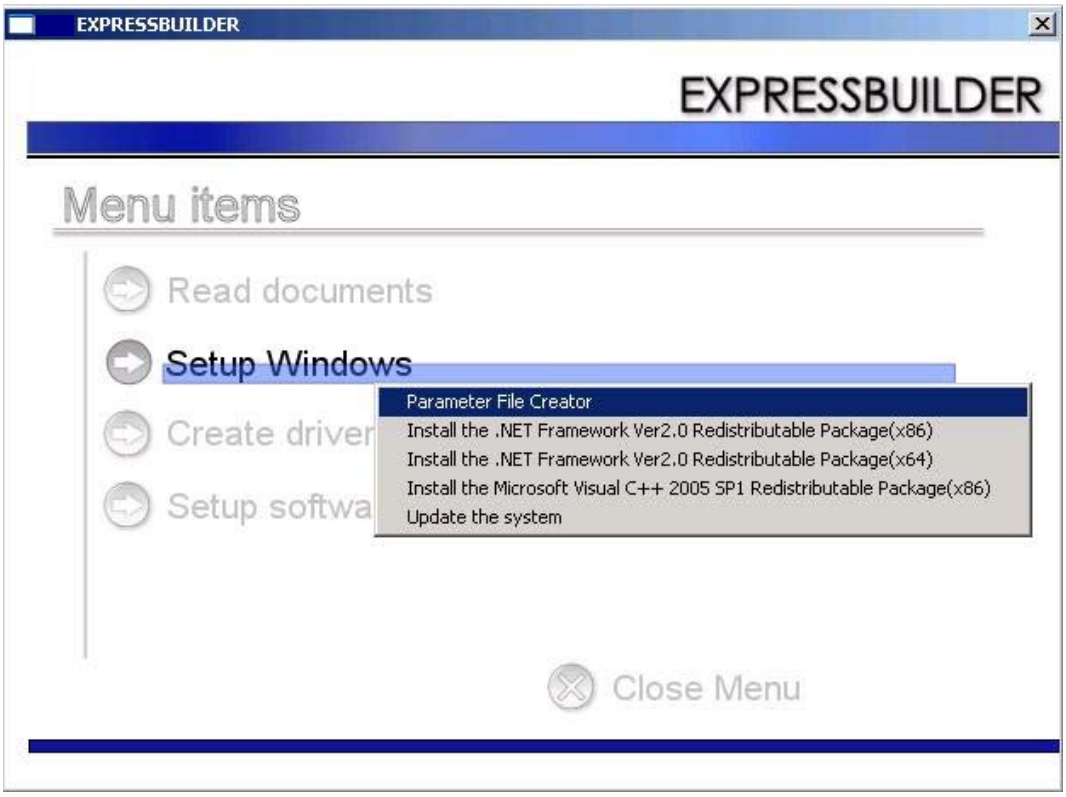

The Parameter File Creator is displayed.

5. [Load Parameters] step is displayed.
   Select [Do not load parameters] from the menu, and click [Next].

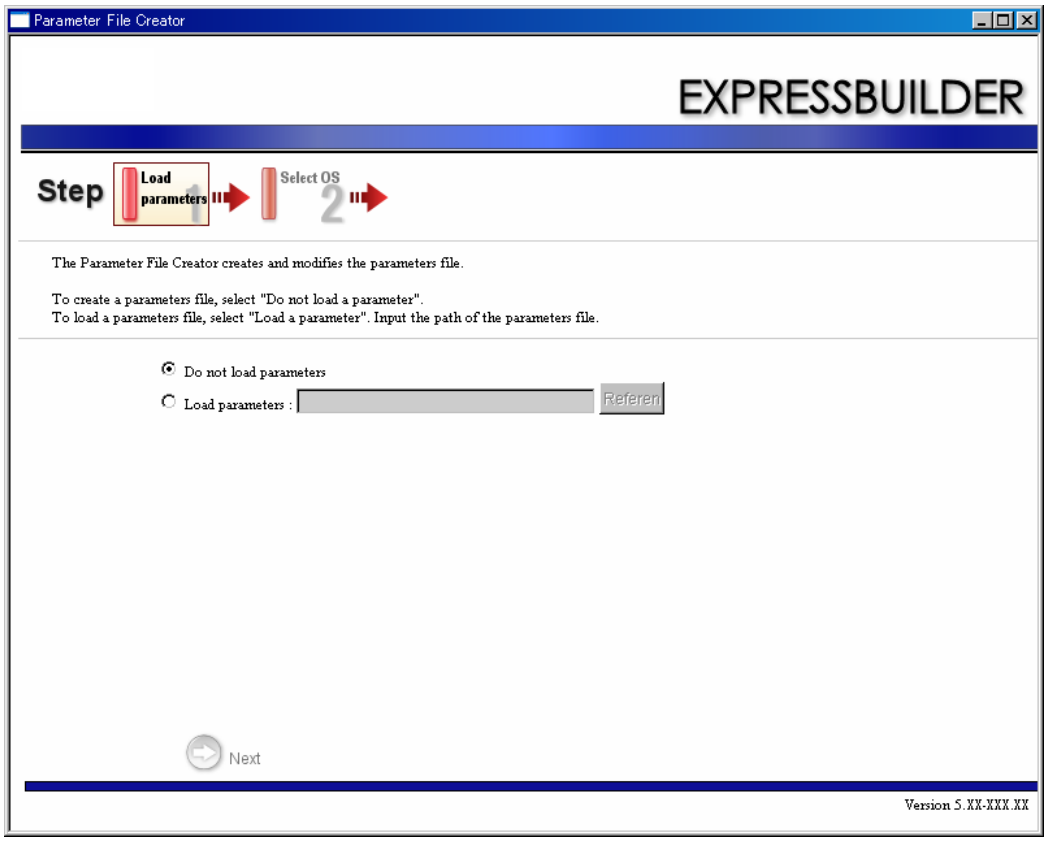

6. Select the Operating System to install.
Select [Install the Windows (32bit editions)] from the menu, and click [Next].

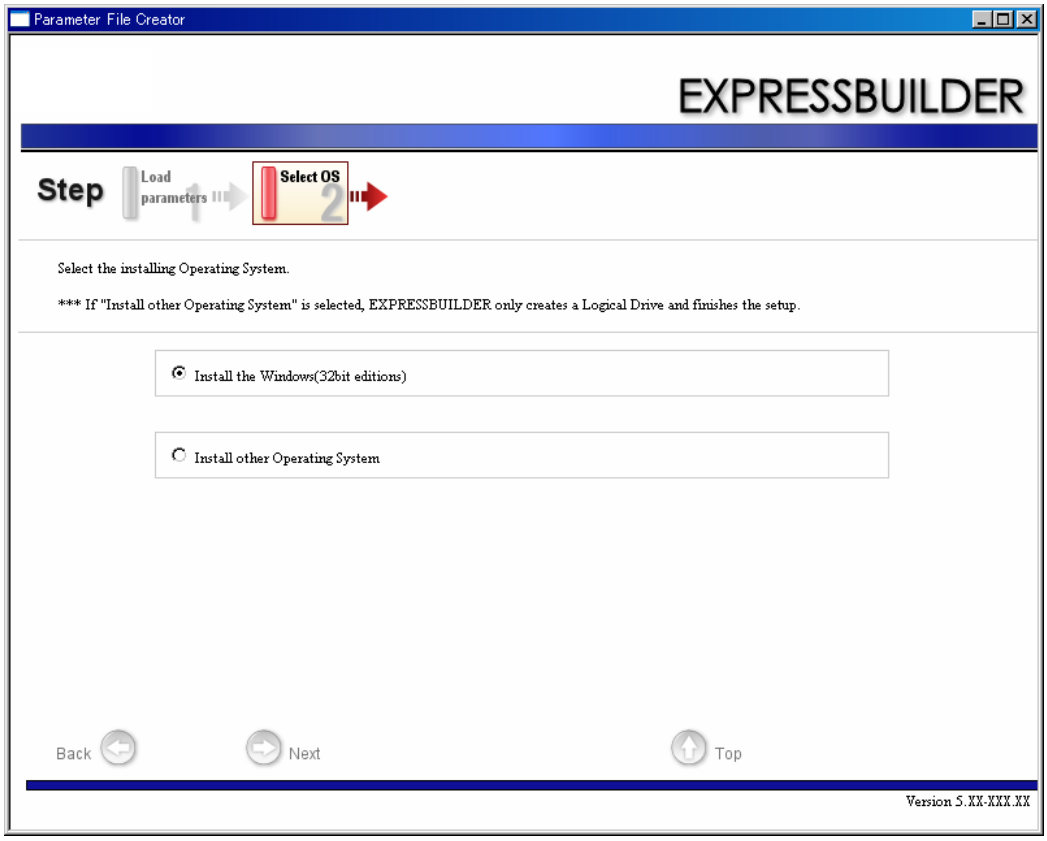

7. Enter the virtual disk settings.

   The [Enter RAID setting] step is displayed. Confirm the parameters, modify if necessary, and click [Next].

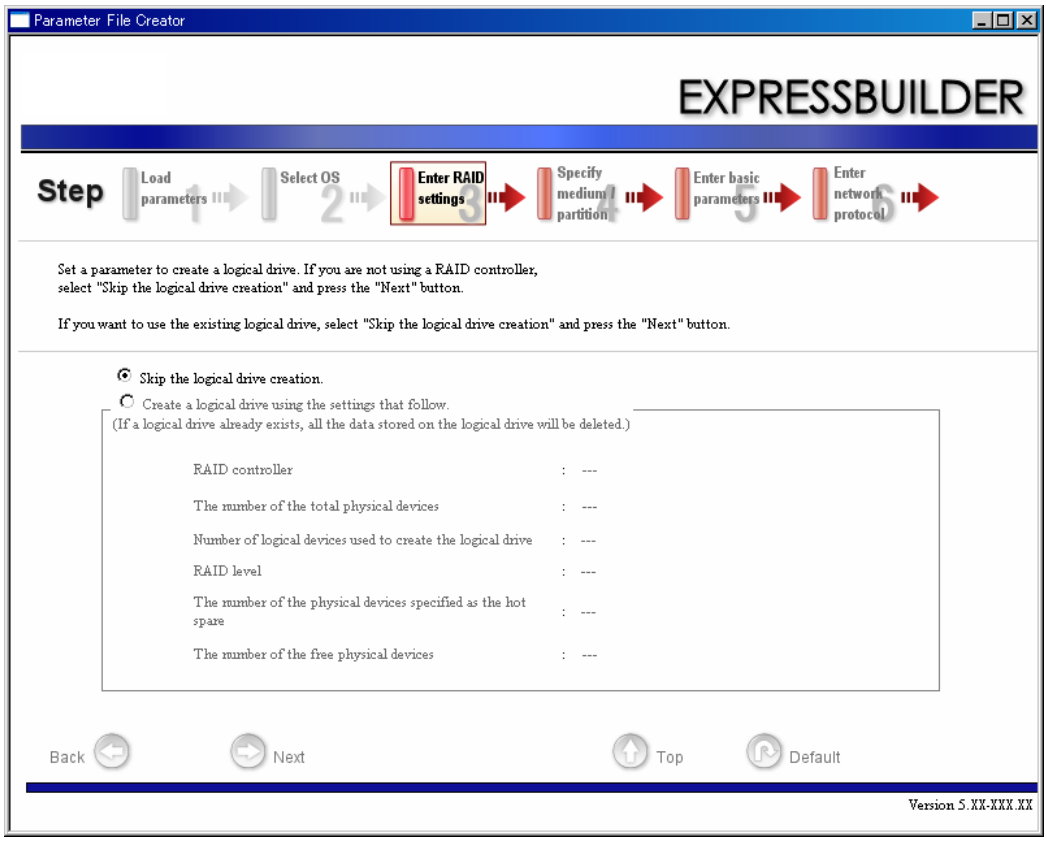

⚠ Caution

At "The number of the total physical devices", the Parameter File Creator displays the upper limit that the RAID controller can support.

The total of "The number of physical devices used to create the logical drive" and "The number of the physical devices specified as the hot spare" must not exceed "The number of the total physical devices" which are connected to the target system.

***Note**: You can use only physical devices that have the same model number to configure a logical drive.*

8. Specify the installation medium and the Windows system partition.

The [Specify medium / Partitions] step is displayed. Confirm the parameters, modify if necessary, and click [Next].

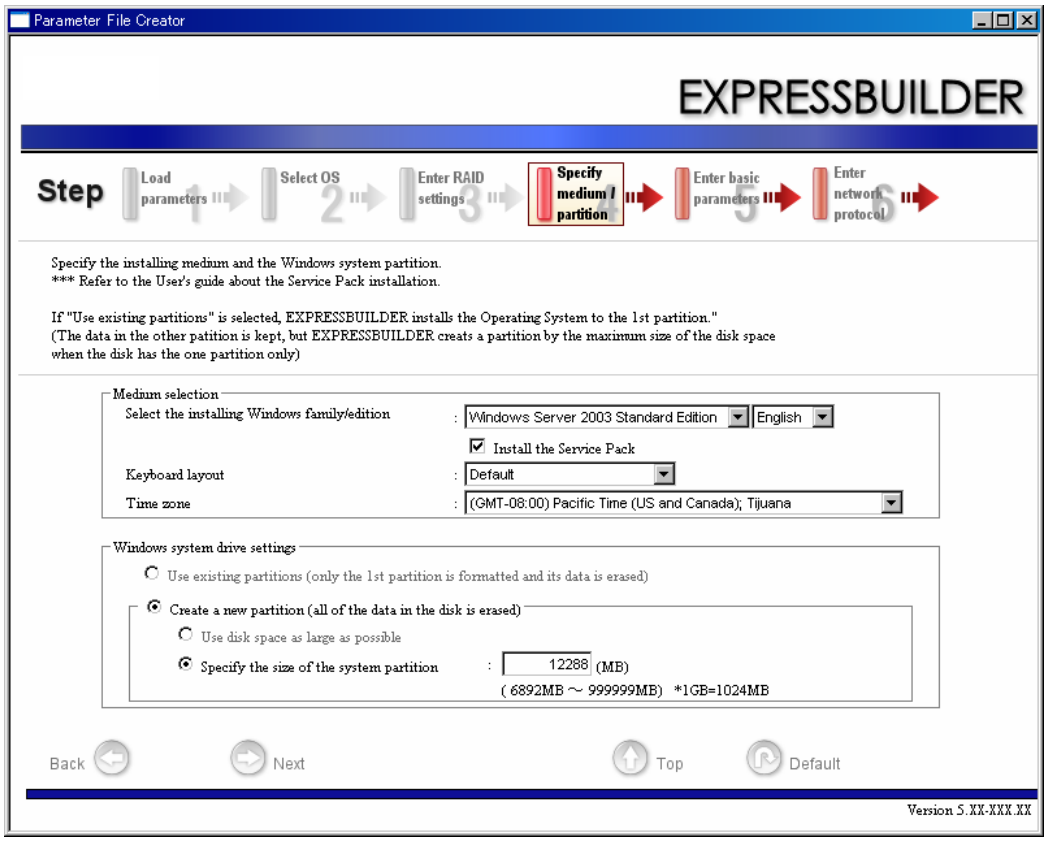

modify if necessary, and click [Next].

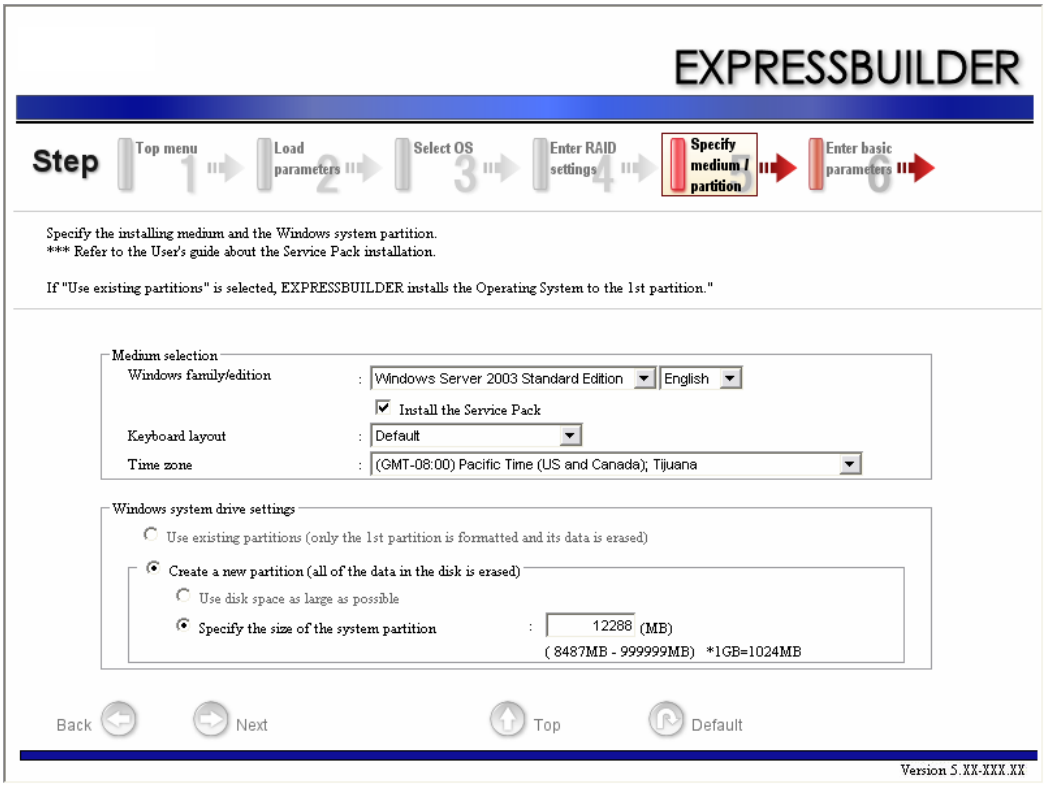

⚠ Caution

About the partition size

- Specify a partition size larger than the required minimum size for the OS installation.
- Do not specify partition size larger than the capacity of the connected hard disk drive.
  - If you select "Create a new partition" at "Windows system drive settings", the contents of the hard disk will be all deleted.
  - If "Use existing partitions" is selected, ExpressBuilder installs the Operating System to the 1st partition (the 1st partition contents are deleted). The data in the other partition is kept if the system has two or more partitions. (See the figure below.)

First partition deleted	Second partition retained	Third partition retained

You can not re-install the system with an existing partition that is upgraded to Dynamic Disk. Do not select "Use existing partitions" at "Windows system drive settings".

9. Enter the user information, time zone and client license mode.

The [Enter basic parameters] step is displayed. Confirm the parameters, modify if necessary, and click [Next].

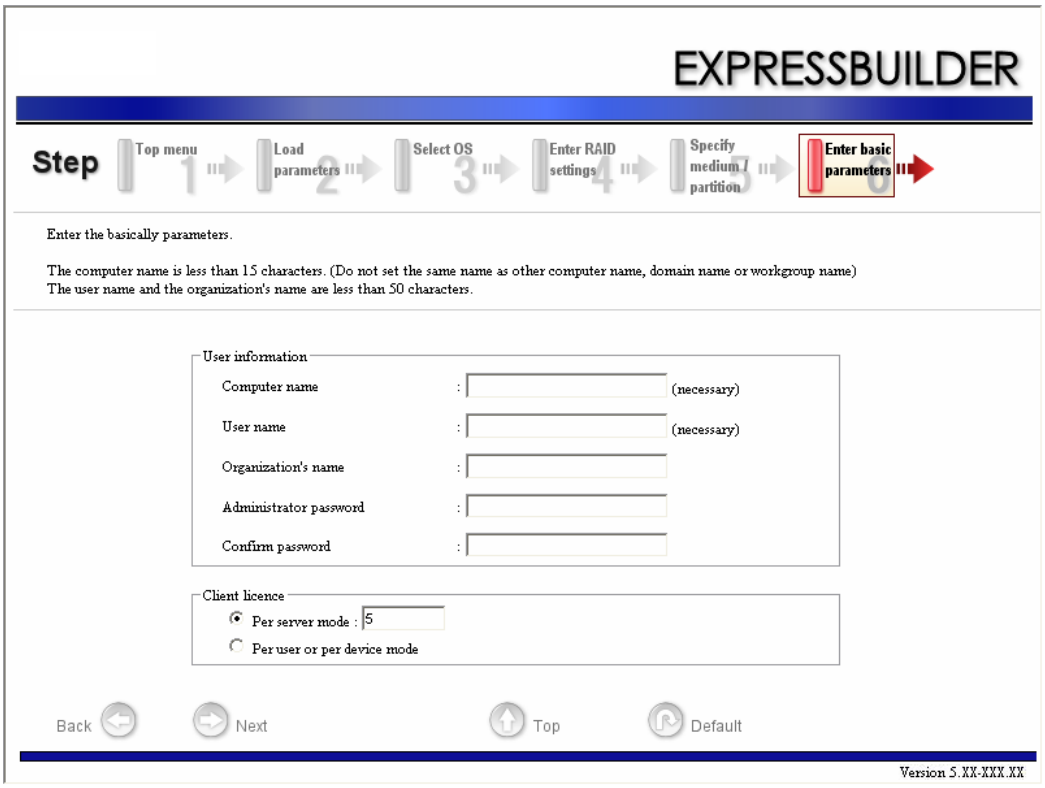

⚠ Caution

The Computer name and User name are required parameters.

***Note**: Even if you do not input a value into "Administrator password", "Confirm password", "??????" is displayed.*

10. Enter the network protocol settings.

The [Enter Network Protocol] step is displayed. Confirm the parameters, modify if necessary, and click [Next].

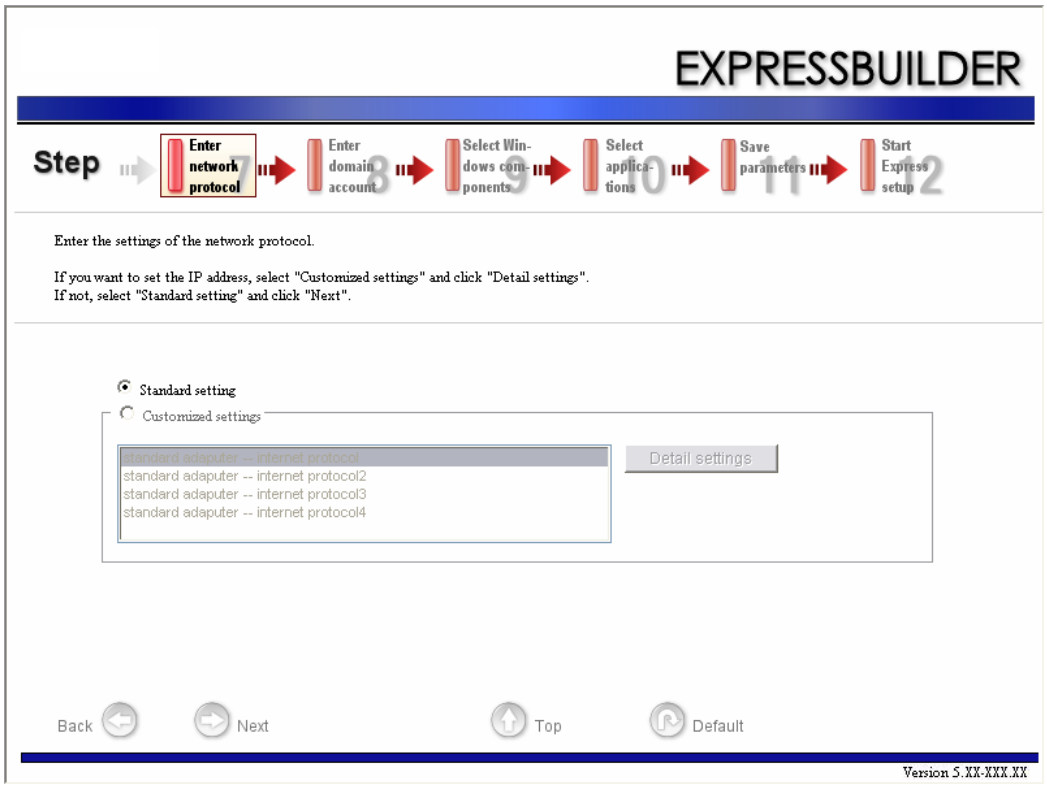

11. Enter the domain or workgroup name to be used.

The [Enter domain and account] step is displayed. Confirm the parameters, modify if necessary, and click [Next].

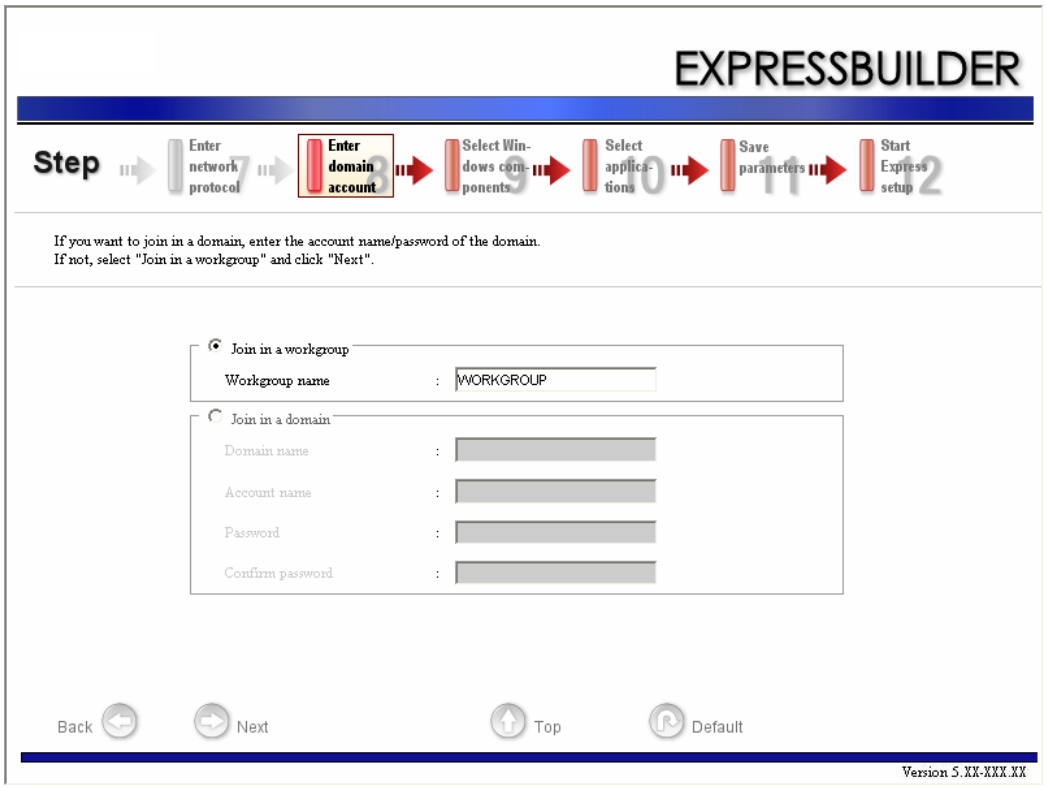

12. Select the components to install.

The [Select Windows component] step is displayed. Confirm the parameters, modify if necessary, and click [Next].

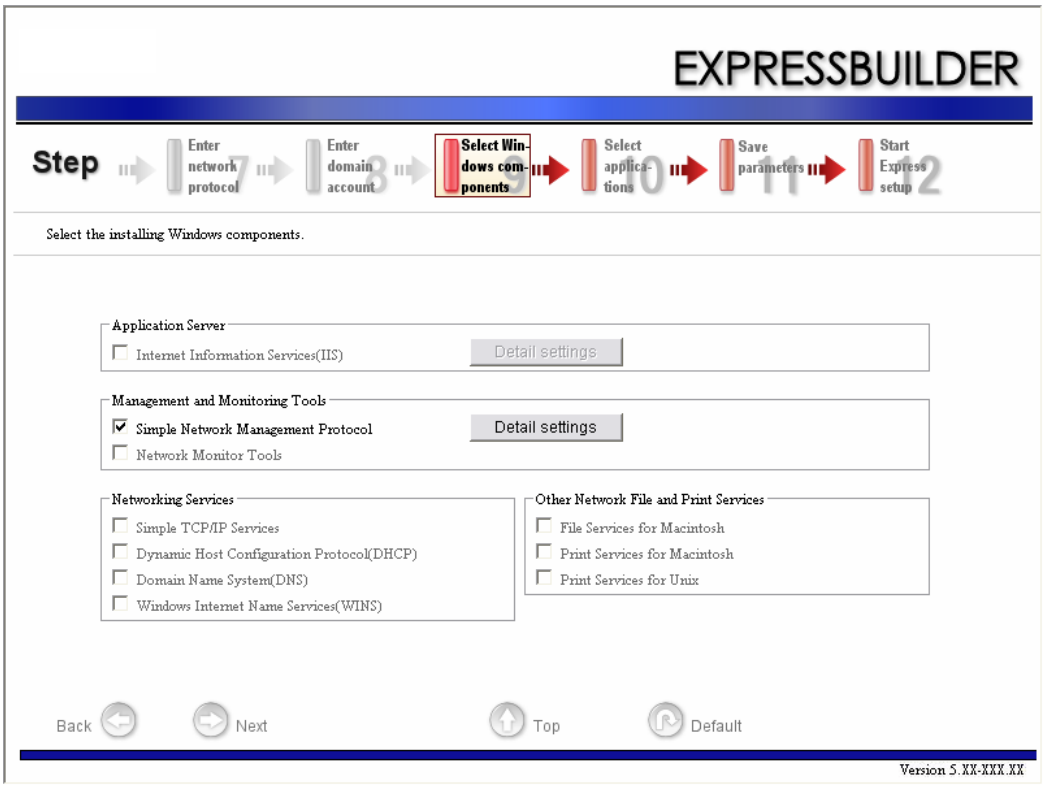

13. Select the applications to install.

The [Setting applications] step is displayed. Confirm the parameters, modify if necessary, and click [Next].

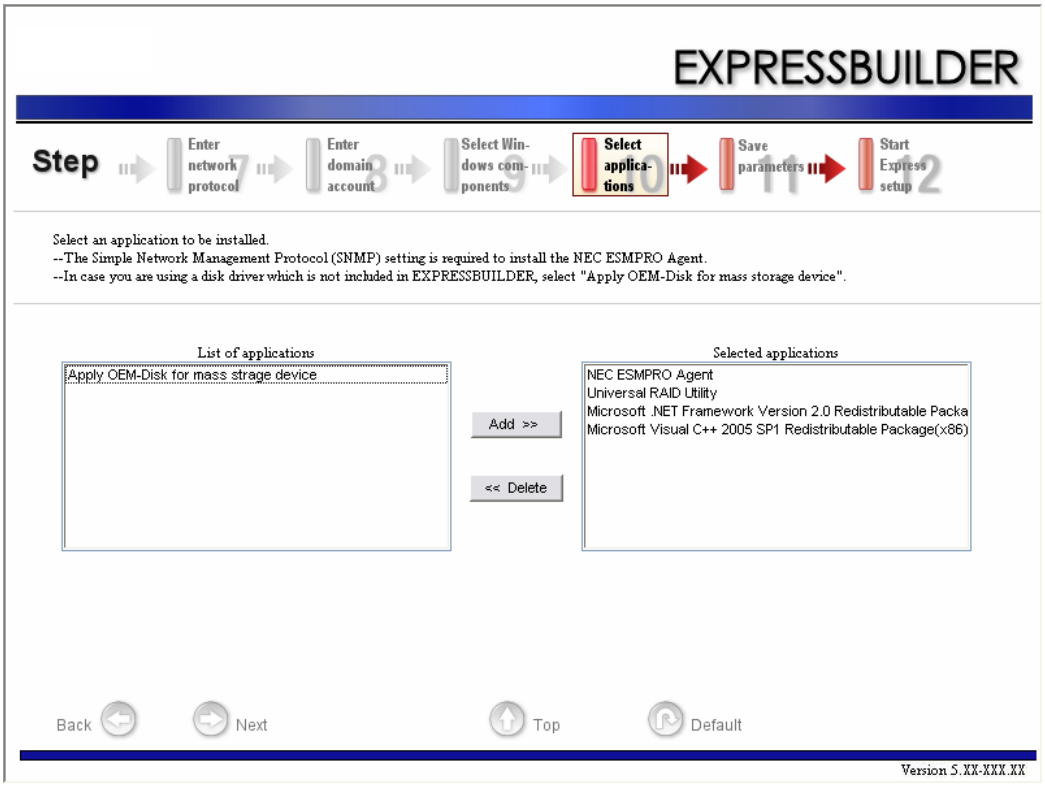

14. Save the parameters.

The [Save parameters] step is displayed.

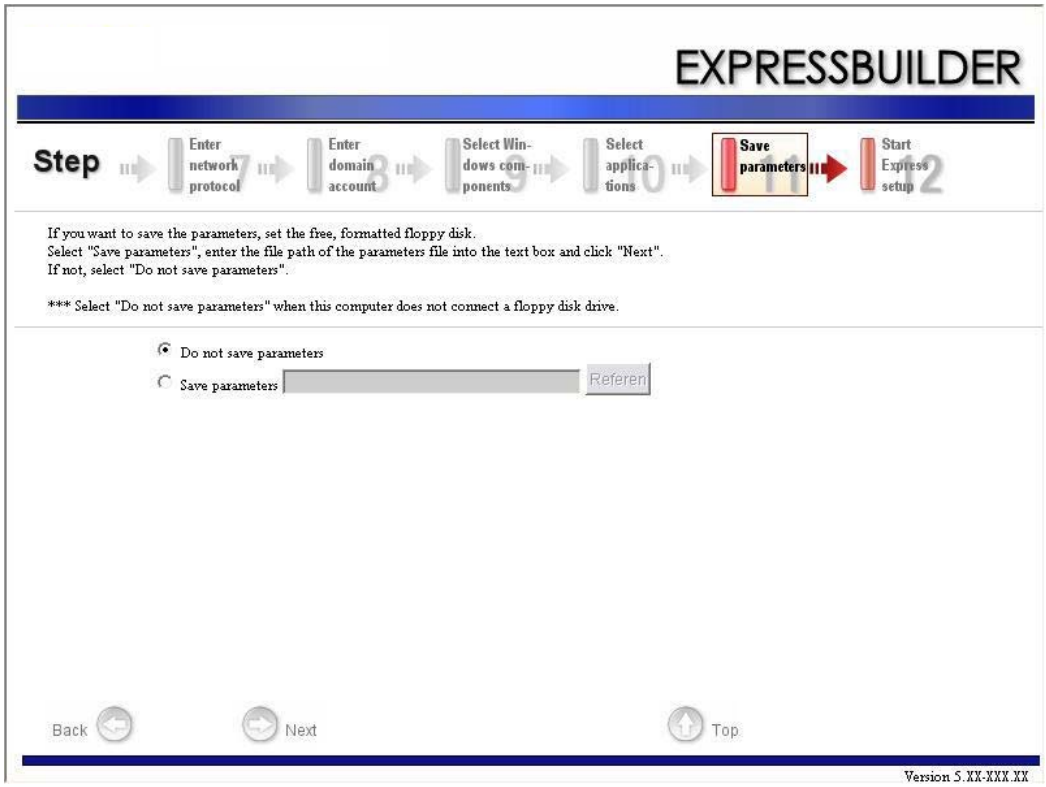

If you want to save the parameters , set the free formatted floppy disk.

Select [Save parameters], enter the file path of the parameters files into the text box and click [Next].

Otherwise, select [Do not save parameters].

15. Saved to a floppy disk.

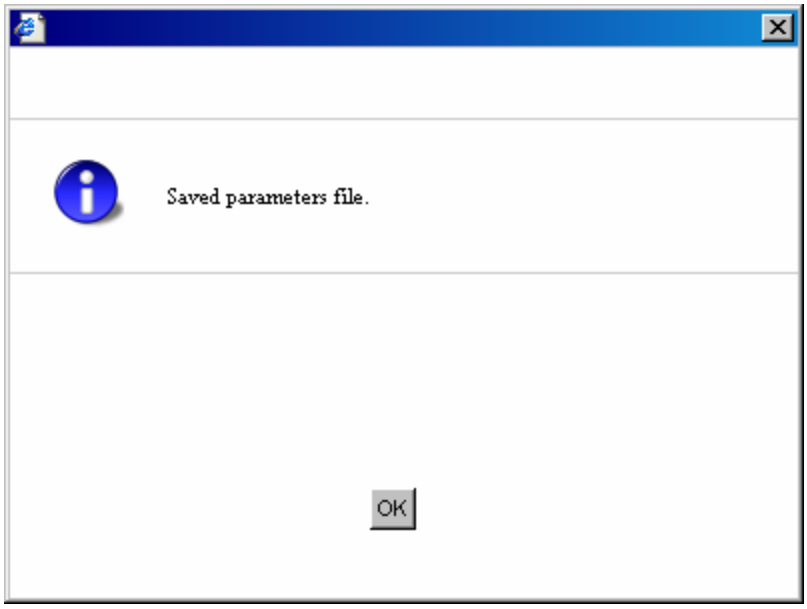

The floppy disk containing the parameters file has been created.

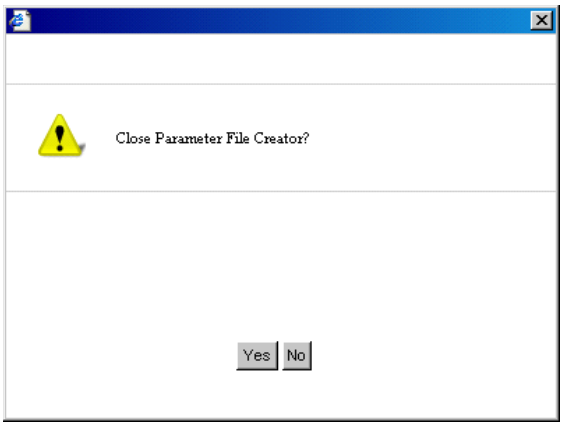

Click [Yes] to exit the Parameter File Creator.

***Notes**:*

- *If you wish to modify the existing information file (parameters file), click "Load Parameters" at the [Load Parameters] screen. Refer to the help to modify the information file.*
- *If you wish to abort the operation , click ☒ at the upper-right corner of the screen.*

NEC ESMPRO

NEC ESMPRO lets a system administrator manage remote servers across a network. NEC ESMPRO monitors server hardware and software configurations, failures, and performance.

Using the log data collected by NEC ESMPRO, a system administrator can track long-term and short-term performance, monitor server usage, create graphs to record trends, and check server failure rates. The administrator can use the information collected to create more efficient data routing procedures and optimize the server usage.

> ***Note:*** *For installation procedure and detailed explanations on NEC ESMPRO, refer to the online documentation provided on the ExpressBuilder DVD.*

Functions and Features

NEC ESMPRO offers many functions and features for managing remote servers across a network. These features help the system administrator perform daily system operation, system extension, and transfer tasks. Some features of NEC ESMPRO Manager include:

- Hardware and software server configuration
  - Hardware resources mounted in servers, such as the CPU, memory, disks, RAID system, and LAN boards.
  - Software resources, such as operating system information and the drivers running on each server.
- Server failures
  - On-screen real-time displays provide the system administrator with the failure type, location, cause, and suggested corrective action.
  - Failure data includes hardware failure information such as system board temperature, memory failure, crashes, and software failure information.
- Performance
  - NEC ESMPRO monitors server performance and displays server usage on the screen and displays information, such as the rate of CPU load, memory usage, disk usage, and LAN traffic. Usage threshold values can help the system administrator monitor and prevent server overloads.

> ***Note:*** *For the installation procedure and detailed explanations on NEC ESMPRO, refer to the online documentation provided on the ExpressBuilder DVD.*

NEC DianaScope

NEC DianaScope is a software used for the remote management of the BULL NovaScale series.

See the online documentation for details on the functions and installation of NEC DianaScope.

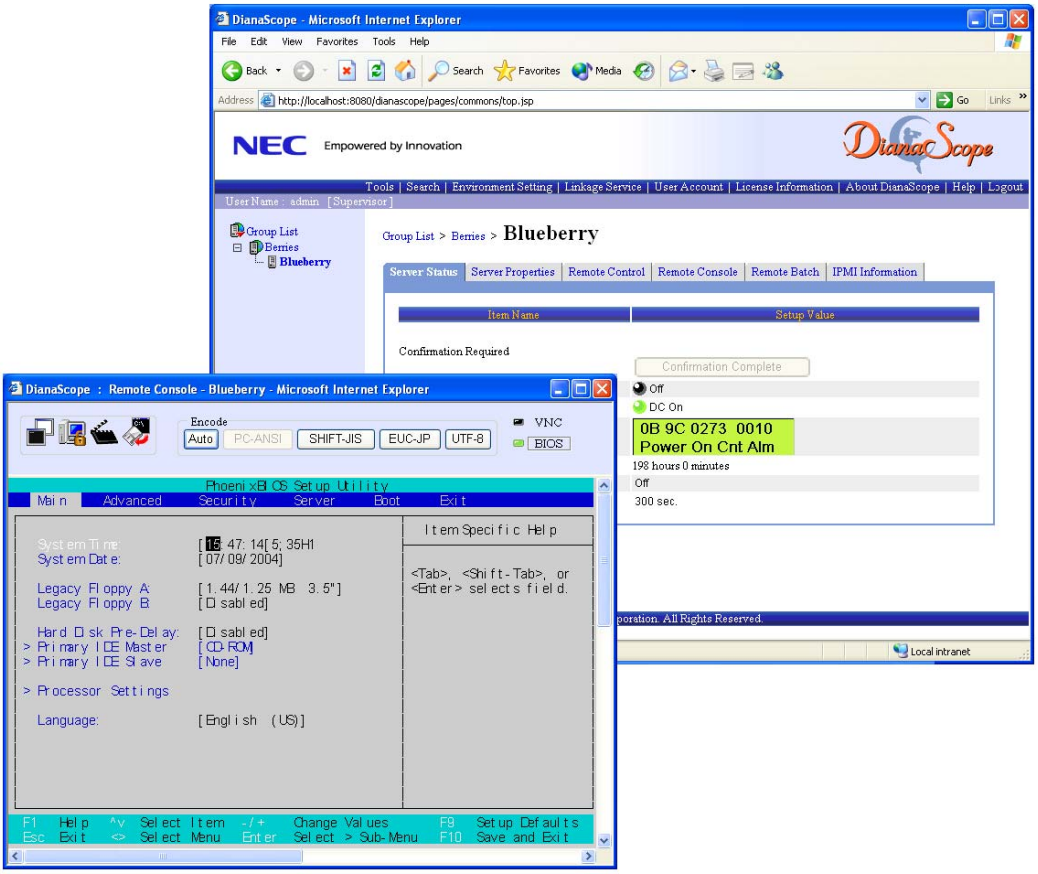

Note: You need the server license to activate NEC DianaScope for this product.

Universal RAID Utility

The Universal RAID Utility is an application to manage or monitor the following RAID Controllers.

- Onboard RAID Controller (LSI Embededd MegaRAID)
- Internal RAID Controller
- LSILogic MegaRAID SAS 8480E RAID controller (External SAS HDD)
- RAID controller (SAS/SATA, RAID0/1)
- RAID controller (SAS/SATA, RAID0/1/5/6)

Before attempting to operate the Universal RAID Utility, read the "Universal RAID Utility User's Guide" included in ExpressBuilder DVD.

Setup with Express Setup

You can install the Universal RAID Utility using the Express Setup contained in the ExpressBuilder DVD.

When you start the Express Setup, a dialog to specify an application appears. Select [Universal RAID Utility] on the dialog.

Manual Setup

Windows

Before installing the Universal RAID Utility, you need to install the following software:

- *Microsoft .NET Framework 2.0*
- The Runtime component of the Microsoft Visual C++ 2005 SP1

This software is provided on the ExpressBuilder DVD. Click [Setup Windows] Å® [Install the .NET Framework Ver 2.0 Redistributable Package(x86)] (If CPU architecture is x64, [Install the .NET Framework Ver2.0

Redistributable Package(x64)]) in [Autorun Menu] for the setup of Microsoft.NET Framework 2.0.

Click [Setup Windows] Å® [Install the Microsoft Visual C++ 2005 SP1 Redistributable Package(x86)] (Use the x86 package whatever the CPU architecture may be.) for the setup of the Runtime component of the Microsoft Visual C++ 2005 SP1.

*When the above software ins istalled, click [Setup Software] → [Universal RAID Utility].*Linux

You need to run the setup.sh in the install image of Universal RAID Utility.

There is the install image of Universal RAID Utility in the following directory of ExpressBuilder.

/*BBB*/lnx/pp/uraidutl

The part of BBB is BBB of the medium number (5.AA-BBB.CC) of ExpressBuilder.

Using Universal RAID Utility via Network

Universal RAID Utility doesn't have the function of management to computer installed RAID Controller via network. If you want to manage it via network, please use the function of remote console (ex. Remote Desktop of Windows).

Easy Configuration

You can not use the function of Easy Configuration to LSI Embedded MegaRAID.

Creating Logical Drive of RAID 6

You must use four or larger Physical Devices for creating the Logical Drive of RAID 6 by Universal RAID Utility. If you want to create the Logical Drive from three Physical Devices, you need to use WebBIOS.

Appendix 8: Equipment Log

Use this equipment log form to record pertinent information about your system. You will need some of this information to run the System Setup Utility. Be sure to update the equipment log when you add options.

Record the model and serial numbers of the system components, dates of component removal or replacement, and the name of the vendor from whom the component was purchased. Be sure to record the same information for any components added to the system, such as a power supply, hard disk drives, add-in boards, or printers.

Record the model and serial numbers of the unit and system board. The model and serial numbers of the system unit are recorded on a label attached to the rear of the unit.

The location of serial numbers on add-in boards, hard disk drives, and external equipment, such as video displays or printers, varies from one manufacturer to another. Literature accompanying these products should illustrate or describe the location of model and serial numbers.

Hardware

Main Unit						
	Model name		Serial No.		Date installed	
CPU						
#1	Clock		Serial No.		Date installed	
#2	Clock		Serial No.		Date installed	
Memory						
#11, #21	Size		Serial No.		Date installed	
#31, #41	Size		Serial No.		Date installed	
#12, #22	Size		Serial No.		Date installed	
#32, #42	Size		Serial No.		Date installed	
Monitor						
	Type		Model name		Serial No.	
					Date installed	
Hard Disk						
#1	Type			Serial No.		
	Capacity			Date installed		
	Type number					
#2	Type			Serial No.		
	Capacity			Date installed		
	Type number					
#3	Type			Serial No.		
	Capacity			Date installed		
	Type number					
#4	Type			Serial No.		
	Capacity			Date installed		
	Type number					
#5	Type			Serial No.		
	Capacity			Date installed		
	Type number					
#6	Type			Serial No.		
	Capacity			Date installed		
	Type number					
Backup Device						
	Size		Capacity		Serial No.	
	Model name		Type number		Date installed	

PCI Slot #1B				
	Model name		Serial No.	
			Date installed	
PCI Slot #1C				
	Model name		Serial No.	
			Date installed	
Printer				
	Model name		Serial No.	
	Manufacturer		Date installed	
Additional cabinet for disk				
	Model name		Serial No.	
			Date installed	
External Peripheral Device 1				
	Model name		Serial No.	
	Manufacturer		Date installed	
External Peripheral Device 2				
	Model name		Serial No.	
	Manufacturer		Date installed	
External Peripheral Device 3				
	Model name		Serial No.	
	Manufacturer		Date installed	
External Peripheral Device 4				
	Model name		Serial No.	
	Manufacturer		Date installed	

Software

Firmware version				
OS Application of RUR media	Apply	Name: Name:		Version Version
File system	FAT	HPFS	NTFS	
	Others ( )			
Bundled software installed				
Licensed software installed				
Application running when a failure occurred				

Technical publication remarks form

Title:	NovaScale R440 E1 User's Guide

Reference:	86 A1 83EV 00	**Date:**	January 2008

ERRORS IN PUBLICATION

SUGGESTIONS FOR IMPROVEMENT TO PUBLICATION

Your comments will be promptly investigated by qualified technical personnel and action will be taken as required.
If you require a written reply, please include your complete mailing address below.

NAME: _____ DATE: _____

COMPANY: _____

ADDRESS: _____

_____

Please give this technical publication remarks form to your BULL representative or mail to:

Bull - Documentation D[ept.]
1 Rue de Provence
BP 208
38432 ECHIROLLES CEDEX
FRANCE
info@frec.bull.fr

Technical publications ordering form

To order additional publications, please fill in a copy of this form and send it via mail to:

BULL CEDOC
357 AVENUE PATTON
B.P.20845
49008 ANGERS CEDEX 01
FRANCE

Phone: +33 (0) 2 41 73 72 66
FAX: +33 (0) 2 41 73 70 66
E-Mail: srv.Duplicopy@bull.net

Reference	Designation	Qty
_ _ _ _ _ _ _ _ _ _ _ _ [_ _]		
_ _ _ _ _ _ _ _ _ _ _ _ [_ _]		
_ _ _ _ _ _ _ _ _ _ _ _ [_ _]		
_ _ _ _ _ _ _ _ _ _ _ _ [_ _]		
_ _ _ _ _ _ _ _ _ _ _ _ [_ _]		
_ _ _ _ _ _ _ _ _ _ _ _ [_ _]		
_ _ _ _ _ _ _ _ _ _ _ _ [_ _]		
_ _ _ _ _ _ _ _ _ _ _ _ [_ _]		
_ _ _ _ _ _ _ _ _ _ _ _ [_ _]		
_ _ _ _ _ _ _ _ _ _ _ _ [_ _]		
_ _ _ _ _ _ _ _ _ _ _ _ [_ _]		
_ _ _ _ _ _ _ _ _ _ _ _ [_ _]		
[_ _] : The latest revision will be provided if no revision number is given.		

NAME: _____ DATE: _____

COMPANY: _____

ADDRESS: _____

_____

PHONE: _____ FAX: _____

E-MAIL: _____

For Bull Subsidiaries:

Identification: _____

For Bull Affiliated Customers:

Customer Code: _____

For Bull Internal Customers:

Budgetary Section: _____

For Others: Please ask your Bull representative.

BULL CEDOC
357 AVENUE PATTON
B.P.20845
49008 ANGERS CEDEX 01
FRANCE

REFERENCE
86 A1 83EV 00